mikroBUS™ Cape

ver.
100

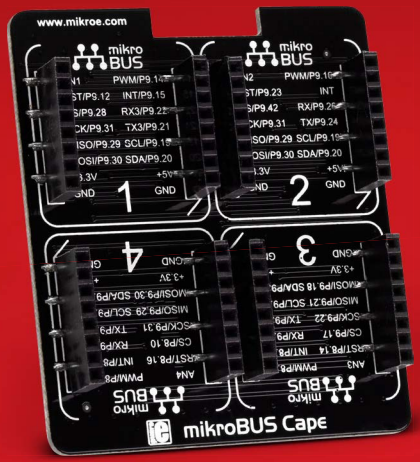

MikroElektronika
DEVELOPMENT TOOLS | COMPILERS | BOOKS

mikroBUS™ Cape - schematic

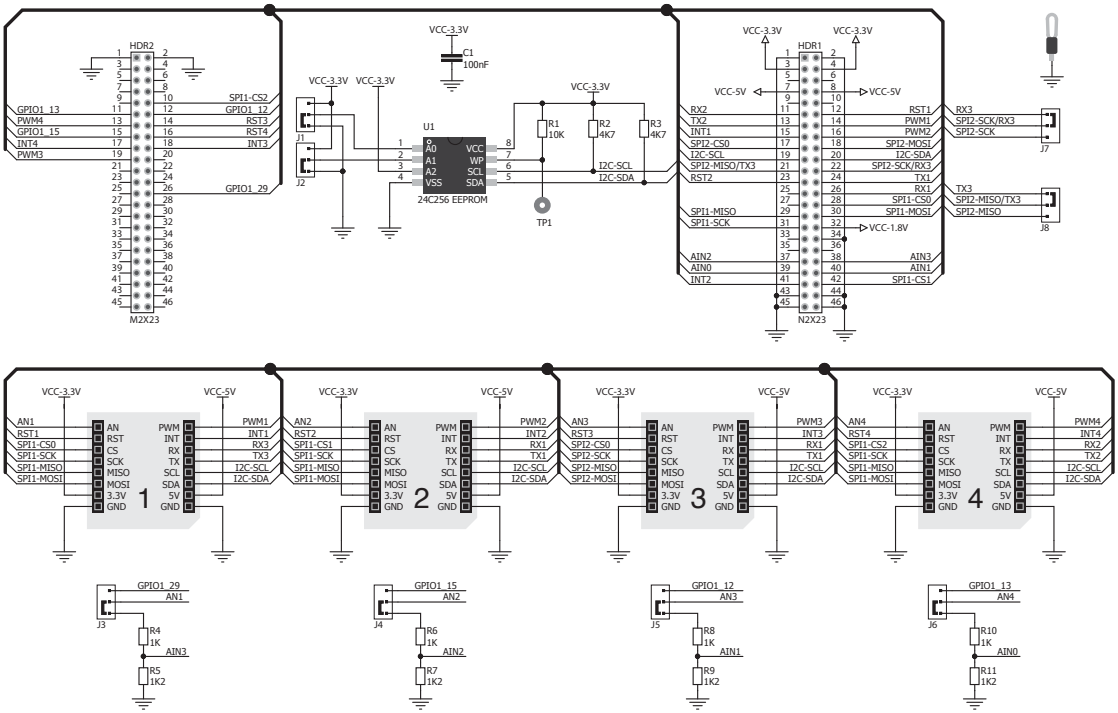

ver. 100

MikroElektronika
DEVELOPMENT TOOLS | COMPILERS | BOOKS

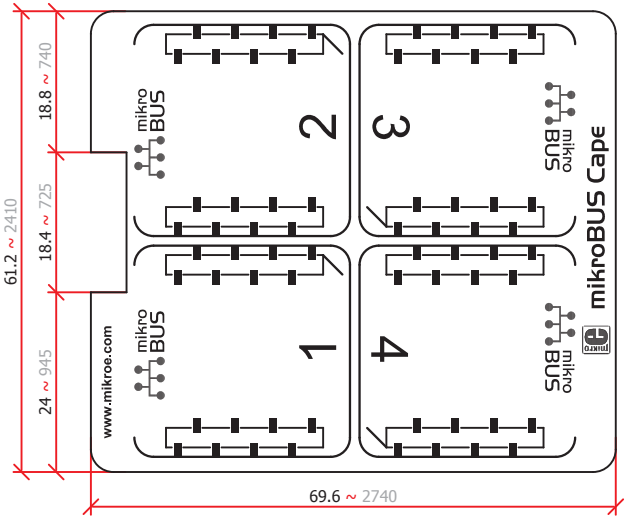

Legend
- mm
- mils

MikroElektronika
DEVELOPMENT TOOLS | COMPILERS | BOOKS