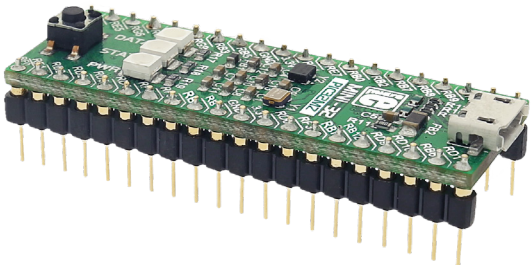

MINI-32™

development board for PIC32MZ

PIC32 development board fitted in a DIP40 form factor, containing a powerful microcontroller.

MINI ARM

MikroElektronika
DEVELOPMENT TOOLS | COMPILERS | BOOKS

TO OUR VALUED CUSTOMERS

I want to express my thanks to you for being interested in our products and for having confidence in MikroElektronika.

The primary aim of our company is to design and produce high quality electronic products and to constantly improve the performance thereof in order to better suit your needs.

Nebojsa Matic
General Manager

The PIC32MZ, ARM® and Windows® logos and product names are trademarks of Texas Instruments®, ARM® Holdings and Microsoft® in the U.S.A. and other countries.

Table of Contents

Introduction to MINI-32 for PIC32MZ 4
Key features 4
System specifications 5
1. Programming with mikroBootloader 6
step 1 - Connecting MINI-32 for PIC32MZ 6
step 2 - Browsing for .HEX file 7
step 3 - Selecting .HEX file 7
step 4 - Uploading .HEX file 8
step 5 - Finish upload 9
2. Schematic 10
3. Pinout 11
4. Dimensions 12

Introduction to MINI-32 for PIC32MZ

Miniature and powerful development tool designed to work as a standalone device or as a MCU card in DIP40 socket. MINI-32 for PIC32MZ is preprogrammed with USB HID bootloader so it is not necessary to have an external programmer. If you need to use an external programmer (like mikroProg) attach it to MINI-32 for PIC32MZ via pads marked with TMS, TDO, TCK, TDI.

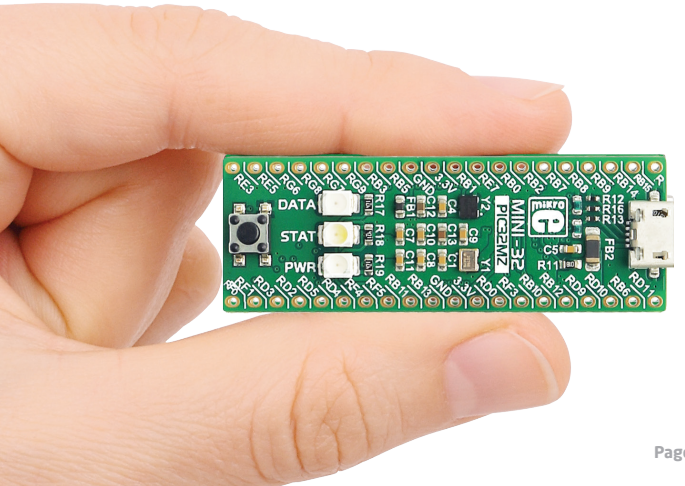

Key features

01 Connection pads
02 Micro USB connector
03 DATA LED
04 STAT LED
05 POWER supply LED
06 Reset button
07 Power supply regulator
08 PIC32MZ1024EFH064 microcontroller

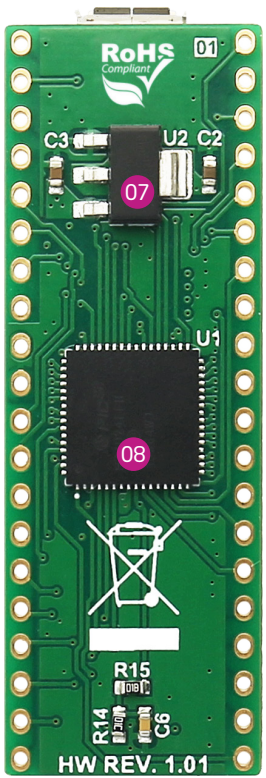

System specifications

power supply

3.3V via pads or 5V via USB

power consumption

depends on MCU state (max current into 3.3V pad is 300mA)

board dimensions

50.8 x 17.78mm (2 x 0.7")

weight

~6g (0.013 lbs)

1. Programming with mikroBootloader

You can program the microcontroller with the bootloader that is preprogrammed into the device by default. To transfer .hex file from a PC to the MCU you need the bootloader software (**mikroBootloader USB HID**) which can be downloaded from:

download.mikroe.com/examples/starter-boards/mini/pic32mz/mini-pic32mz-mikrobootloader-usb-hid-v280.zip

After the software is downloaded unzip it to the desired location and start mikroBootloader USB HID software.

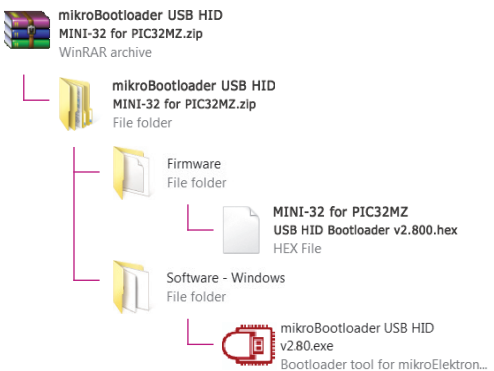

step 1 – Connecting MINI-32

Figure 1-1: USB HID mikroBootloader window

01 To start, connect the USB cable, or if already connected press the **Reset** button on your MINI-32 board. Click the **Connect** button within 5s to enter the bootloader mode, otherwise existing microcontroller program will execute.

step 2 - Browsing for .HEX file

Figure 1-2: Browse for HEX

01 Click the **"Browse for HEX"** button and from a pop-up window (**Figure 1-3**) choose the .HEX file which will be uploaded to MCU memory.

step 3 - Selecting .HEX file

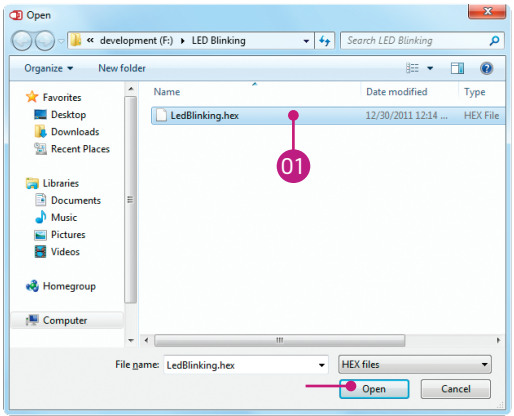

Figure 1-3: Selecting HEX

01 Select .HEX file using open dialog window.

02 Click **Open**.

step 4 - Uploading .HEX file

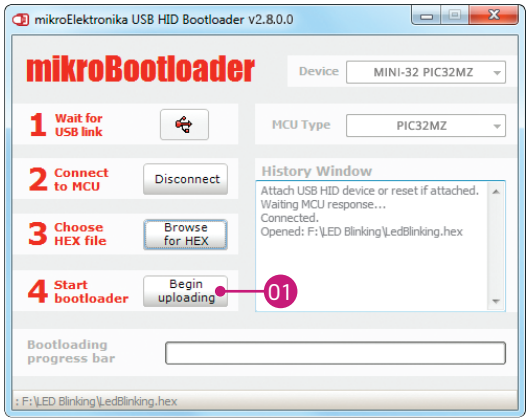

Figure 1-4: Begin uploading

01 To start .HEX file bootloading click the **Begin uploading** button.

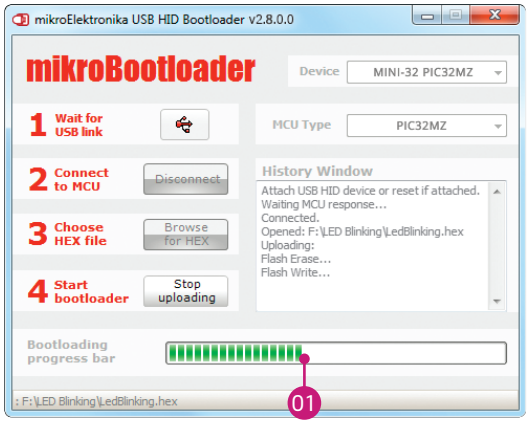

Figure 1-5: Progress bar

01 You can monitor .HEX file uploading via progress bar

step 5 - Finish upload

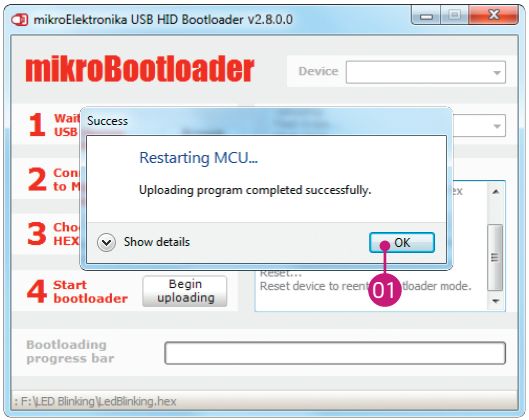

Figure 1-6: Restarting MCU

01 Click **OK** after uploading is finished and wait for 5 seconds. Board will automatically reset and your new program will execute.

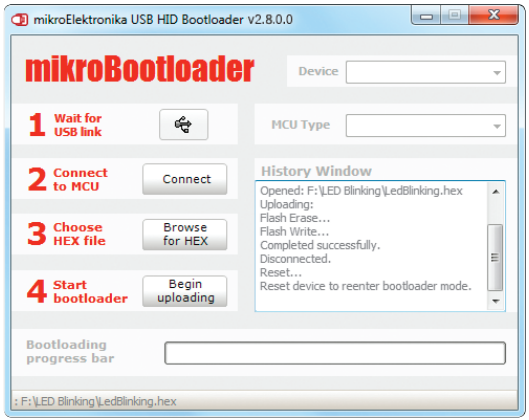

Figure 1-7: mikroBootloader ready for next job

2. Schematic

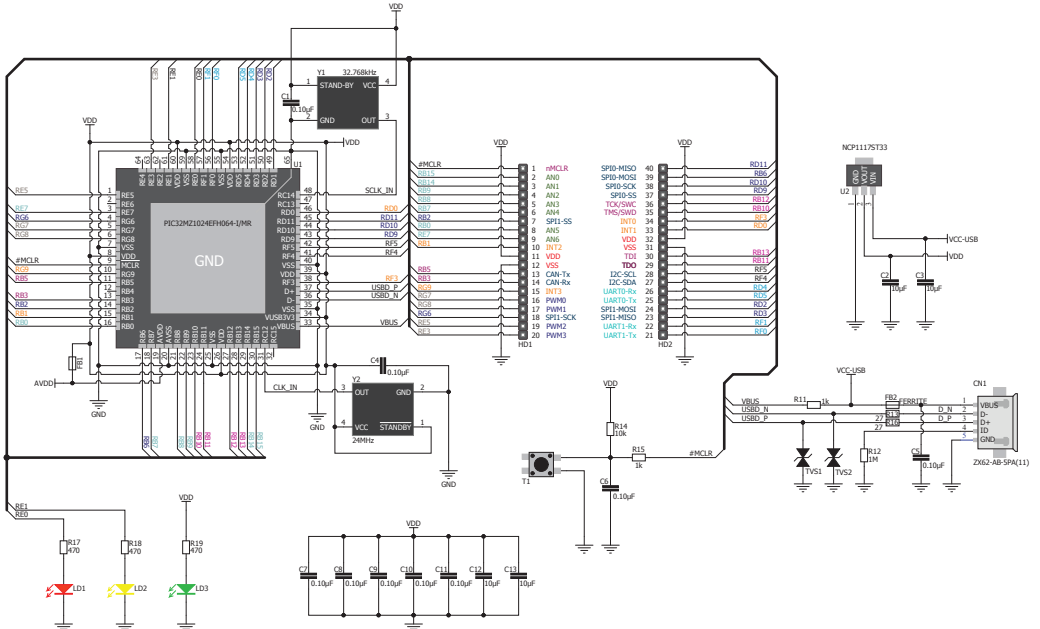

VDD
Y1
32.768kHz
STAND-BY
VCC
GND
OUT
C1
0.10µF
U1
PIC32MZ1024EFH064-I/MR
GND
SCLK_IN
USBD_P
USBD_N
VBUS
#MCLR
AVDD
FB1
C4
0.10µF
Y2
OUT
GND
VCC
STANDBY
24MHz
CLK_IN
HD1
HD2
nMCLR
AN0
AN1
AN2
AN3
AN4
SPI1-SS
AN5
AN6
INT2
VDD
VSS
CAN-Tx
CAN-Rx
INT3
PWM0
PWM1
SPI1-SCK
PWM2
PWM3
SPI0-MISO
SPI0-MOSI
SPI0-SCK
SPI0-SS
TCK/SWC
TMS/SWD
INT0
INT1
VDD
VSS
TDI
TDO
I2C-SCL
I2C-SDA
UART0-Rx
UART0-Tx
SPI1-MOSI
SPI1-MISO
UART1-Rx
UART1-Tx
NCP1117ST33
U2
VCC-USB
C2
10µF
C3
10µF
CN1
VBUS
D-
D+
ID
GND
ZX62-AB-5PA(11)
R11
1k
FB2
FERRITE
D_N
D_P
R12
1M
C5
0.10µF
TVS1
TVS2
R14
10k
R15
1k
T1
C6
0.10µF
RE1
RE0
R17
470
R18
470
R19
470
LD1
LD2
LD3
C7
0.10µF
C8
0.10µF
C9
0.10µF
C10
0.10µF
C11
0.10µF
C12
10µF
C13
10µF

3. Pinout

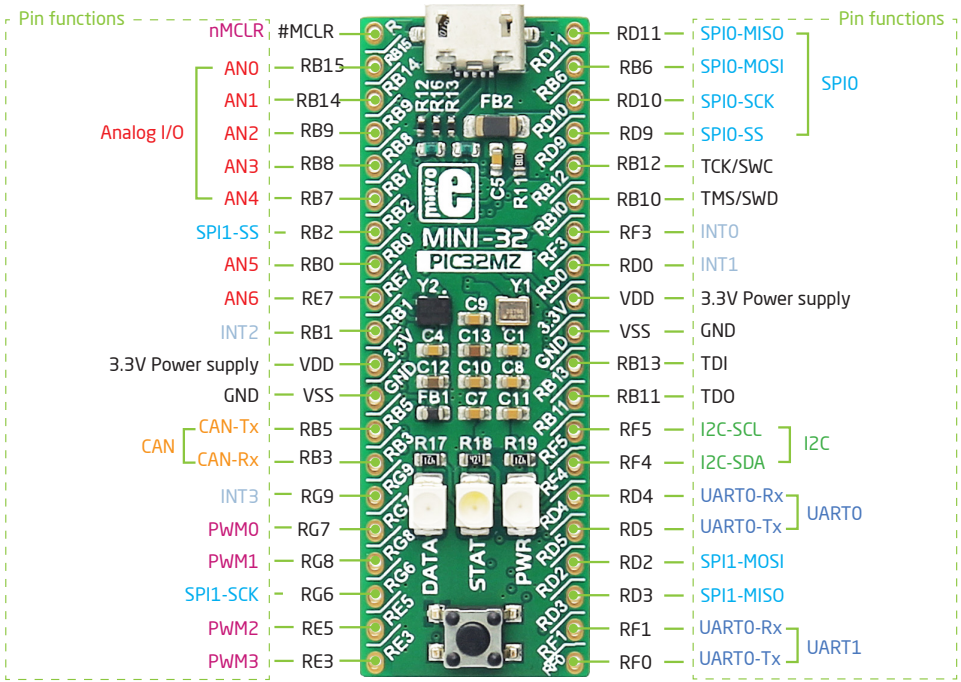
Pin functions
nMCLR
#MCLR
AN0
RB15
AN1
RB14
Analog I/O
AN2
RB9
AN3
RB8
AN4
RB7
SPI1-SS
RB2
AN5
RB0
AN6
RE7
INT2
RB1
3.3V Power supply
VDD
GND
VSS
CAN
CAN-Tx
RB5
CAN-Rx
RB3
INT3
RG9
PWM0
RG7
PWM1
RG8
SPI1-SCK
RG6
PWM2
RE5
PWM3
RE3
MINI-32
PIC32MZ
FB2
FB1
Y2
Y1
C9
C4
C13
C1
C12
C10
C8
C7
C11
R17
R18
R19
DATA
STAT
PWR
RD11
RB6
RD10
RD9
RB12
RB10
RF3
RD0
VDD
VSS
RB13
RB11
RF5
RF4
RD4
RD5
RD2
RD3
RF1
RF0
Pin functions
SPI0-MISO
SPI0-MOSI
SPI0-SCK
SPI0-SS
SPI0
TCK/SWC
TMS/SWD
INT0
INT1
3.3V Power supply
GND
TDI
TDO
I2C-SCL
I2C-SDA
I2C
UART0-Rx
UART0-Tx
UART0
SPI1-MOSI
SPI1-MISO
UART0-Rx
UART0-Tx
UART1
Analog Lines
Interrupt Lines
SPI Lines
I2C Lines
UART lines
CAN lines
PWM lines

4. Dimensions

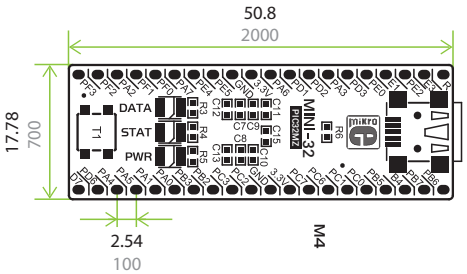

Notes:

Notes:

DISCLAIMER

All the products owned by MikroElektronika are protected by copyright law and international copyright treaty. Therefore, this manual is to be treated as any other copyright material. No part of this manual, including product and software described herein, may be reproduced, stored in a retrieval system, translated or transmitted in any form or by any means, without the prior written permission of MikroElektronika. The manual PDF edition can be printed for private or local use, but not for distribution. Any modification of this manual is prohibited.

MikroElektronika provides this manual 'as is' without warranty of any kind, either expressed or implied, including, but not limited to, the implied warranties or conditions of merchantability or fitness for a particular purpose.

MikroElektronika shall assume no responsibility or liability for any errors, omissions and inaccuracies that may appear in this manual. In no event shall MikroElektronika, its directors, officers, employees or distributors be liable for any indirect, specific, incidental or consequential damages (including damages for loss of business profits and business information, business interruption or any other pecuniary loss) arising out of the use of this manual or product, even if MikroElektronika has been advised of the possibility of such damages. MikroElektronika reserves the right to change information contained in this manual at any time without prior notice, if necessary.

HIGH RISK ACTIVITIES

The products of MikroElektronika are not fault – tolerant nor designed, manufactured or intended for use or resale as on – line control equipment in hazardous environments requiring fail – safe performance, such as in the operation of nuclear facilities, aircraft navigation or communication systems, air traffic control, direct life support machines or weapons systems in which the failure of Software could lead directly to death, personal injury or severe physical or environmental damage ('High Risk Activities'). MikroElektronika and its suppliers specifically disclaim any expressed or implied warranty of fitness for High Risk Activities.

TRADEMARKS

The MikroElektronika name and logo, the MikroElektronika logo, mikroC™, mikroBasic™, mikroPascal™, MINI™, EasyMX PRO™, mikroBUS™, click™ boards, mikroProg™, and mikromedia™ are trademarks of MikroElektronika. All other trademarks mentioned herein are property of their respective companies.
All other product and corporate names appearing in this manual may or may not be registered trademarks or copyrights of their respective companies, and are only used for identification or explanation and to the owners' benefit, with no intent to infringe.

Copyright © 2014 MikroElektronika. All Rights Reserved.