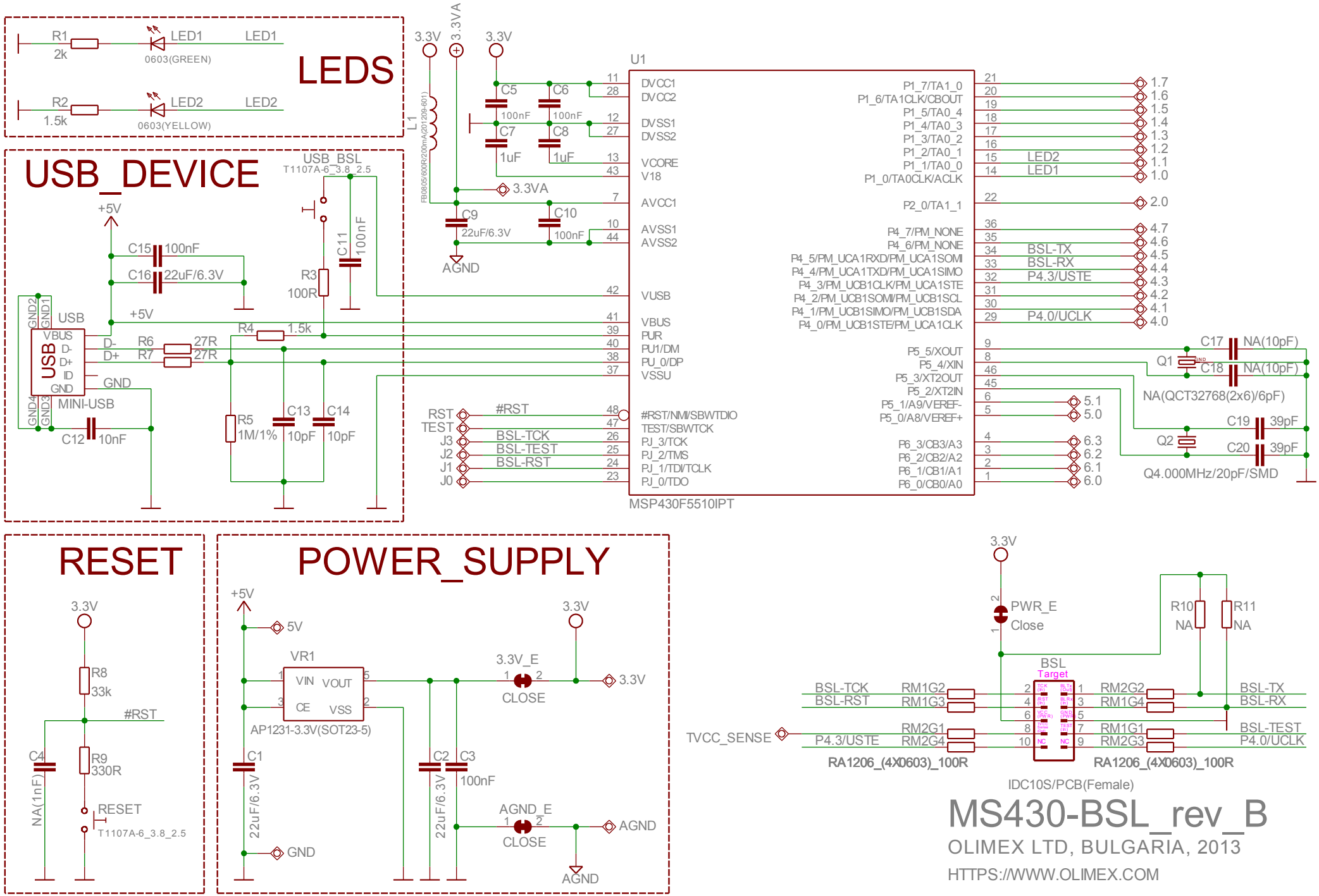
LEDS
R1
2k
LED1
0603(GREEN)
R2
1.5k
LED2
0603(YELLOW)
USB_DEVICE
USB_BSL
T1107A-6_3.8_2.5
+5V
C15 100nF
C16 22uF/6.3V
R3
100R
C11 100nF
USB
MINI-USB
D-
D+
R6 27R
R7 27R
R4 1.5k
R5
1M/1%
C13 10pF
C14 10pF
C12 10nF
GND
3.3V
3.3VA
L1
FB0805/600R/200mA(201209-601)
C5 100nF
C6 100nF
C7 1uF
C8 1uF
C9 22uF/6.3V
C10 100nF
AGND
U1
DVCC1
DVCC2
DVSS1
DVSS2
VCORE
V18
AVCC1
AVSS1
AVSS2
VUSB
VBUS
PUR
PU1/DM
PU_0/DP
VSSU
#RST/NMI/SBWTDIO
TEST/SBWTCK
PJ_3/TCK
PJ_2/TMS
PJ_1/TDI/TCLK
PJ_0/TDO
P1_7/TA1_0
P1_6/TA1CLK/CBOUT
P1_5/TA0_4
P1_4/TA0_3
P1_3/TA0_2
P1_2/TA0_1
P1_1/TA0_0
P1_0/TA0CLK/ACLK
P2_0/TA1_1
P4_7/PM_NONE
P4_6/PM_NONE
P4_5/PM_UCA1RXD/PM_UCA1SOMI
P4_4/PM_UCA1TXD/PM_UCA1SIMO
P4_3/PM_UCB1CLK/PM_UCA1STE
P4_2/PM_UCB1SOMI/PM_UCB1SCL
P4_1/PM_UCB1SIMO/PM_UCB1SDA
P4_0/PM_UCB1STE/PM_UCA1CLK
P5_5/XOUT
P5_4/XIN
P5_3/XT2OUT
P5_2/XT2IN
P5_1/A9/VEREF-
P5_0/A8/VEREF+
P6_3/CB3/A3
P6_2/CB2/A2
P6_1/CB1/A1
P6_0/CB0/A0
MSP430F5510IPT
LED2
LED1
BSL-TX
BSL-RX
P4.3/USTE
P4.0/UCLK
RST
TEST
J3
J2
J1
J0
#RST
BSL-TCK
BSL-TEST
BSL-RST
C17 NA(10pF)
C18 NA(10pF)
Q1
NA(QCT32768(2x6)/6pF)
C19 39pF
C20 39pF
Q2
Q4.000MHz/20pF/SMD
RESET
R8
33k
R9
330R
C4
NA(1nF)
T1107A-6_3.8_2.5
POWER_SUPPLY
5V
VR1
VIN
VOUT
CE
VSS
AP1231-3.3V(SOT23-5)
C1
22uF/6.3V
C2
C3
100nF
22uF/6.3V
3.3V_E
CLOSE
AGND_E
CLOSE
PWR_E
Close
R10
NA
R11
NA
BSL
Target
RM1G2
RM1G3
RM2G1
RM2G4
RM2G2
RM1G4
RM1G1
RM2G3
TVCC_SENSE
RA1206_(4X0603)_100R
IDC10S/PCB(Female)
MS430-BSL_rev_B
OLIMEX LTD, BULGARIA, 2013
HTTPS://WWW.OLIMEX.COM