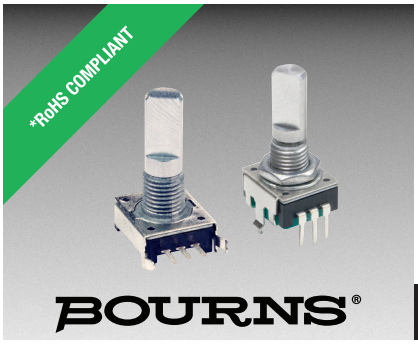

Features

- Push switch option
- Compact, rugged design
- High reliability
- Metal bushing/shaft
- RoHS compliant*

PEC11R Series - 12 mm Incremental Encoder

Electrical Characteristics

Output..... 2-bit quadrature code
Contact Rating..... 10 mA @ 5 VDC
Insulation Resistance
..... 100 megohms @ 250V DC
Dielectric Withstanding Voltage
Sea Level.....300 VAC min.
Electrical Travel ..... Continuous
Contact Bounce (15 RPM)..... 2.0 ms max.**
RPM (Operating) .....60 max.**

Environmental Characteristics

Operating Temperature Range
..... -30 °C to +70 °C (-22 °F to +158 °F)
Storage Temperature Range
..... -40 °C to +85 °C (-40 °F to +185 °F)
Humidity
.... MIL-STD-202, Method 103B, Condition B
Vibration
... 10~55~10 Hz / 1 min. / Amplitude 1.5 mm
Shock.....100 G
IP Rating..... IP 40

Mechanical Characteristics

Mechanical Angle .....360 ° Continuous
Torque
Detent .. 30 to 90 gf-cm (0.41 to 1.25 oz.-in.)
Running ... 10-70 gf-cm (0.14 to 0.97 oz.-in.)
Mounting.....10.2 kgf-cm (8.83 lb.-in.) max.
Shaft Side Load (Static)
.....2.04 kgf (4.5 lbs.) min.
Weight ..... 5 gm (0.17 oz.) max.
Terminals .....Printed circuit board terminals
Soldering Condition
Wave Soldering ..... Sn95.5/Ag2.8/Cu0.7 solder with no-clean flux: 260 °C max. for 3 ± 1 sec.
Hand Soldering.....Not recommended
Hardware .. One flat washer and one mounting nut supplied with each encoder
Rotational Life.....30,000 cycles min.
Switch Life .....20,000 cycles min.

Switch Characteristics

Switch Type
..... Contact Push ON Momentary SPST
Power Rating (Resistive Load)
.....10 mA at 5 VDC
Switch Travel ..... 0.5 ± 0.3 mm
Switch Actuation Force
..... 610 ± 306 gf (8.47 ± 4.24 oz.in.)
Contact Resistance ... 100 milliohms @ 5 VDC

WARNING
Cancer and Reproductive Harm
www.P65Warnings.ca.gov

*RoHS Directive 2015/863, Mar 31, 2015 and Annex.
**Devices are tested using standard noise reduction filters. For optimum performance, designers should use noise reduction filters in their circuits.
Specifications are subject to change without notice. Users should verify actual device performance in their specific applications. The products described herein and this document are subject to specific legal disclaimers as set forth on the last page of this document, and at www.bourns.com/docs/legal/disclaimer.pdf.

Additional Information

Click these links for more information:

PRODUCT | TECHNICAL LIBRARY | INVENTORY | SAMPLES | CONTACT

Product Dimensions

PEC11R-1xxxF-Nxxxx

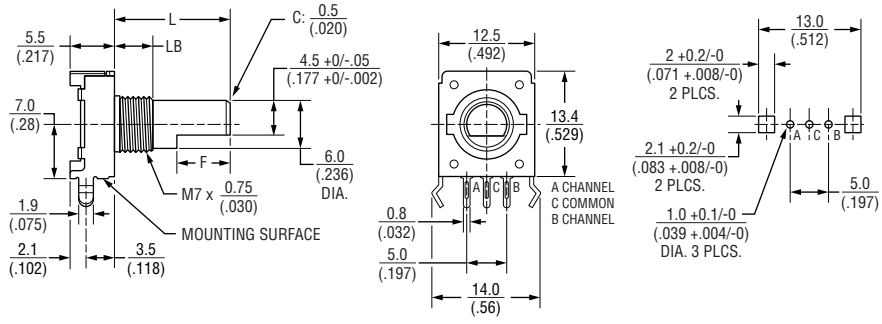

PEC11R-1xxxF-Sxxxx

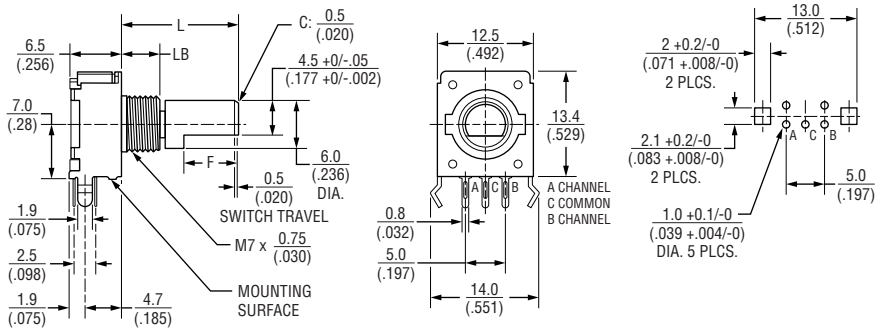

PEC11R-2xxxF-Nxxxx

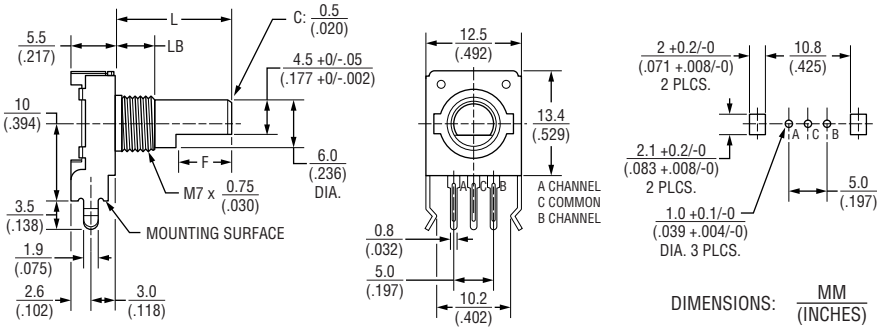

DIMENSIONS: MM (INCHES)

CAUTION
Do not store product in high temperature and humidity, direct sunlight and/or places where corrosive gases may be generated. Please use product within 6 months from the date of delivery and promptly after unpacking.

Applications

Level control, tuning and timer settings in:

- Audio-visual equipment
- Consumer electric appliances
- Radios
- Musical instrumentation
- Communications equipment

Product Dimensions (continued)

PEC11R-2xxxF-Sxxxx

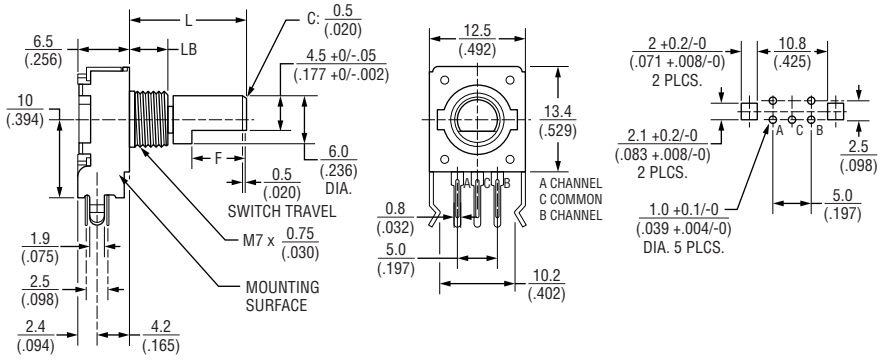

DIMENSIONS: MM (INCHES)

PEC11R-4xxxF-Nxxxx

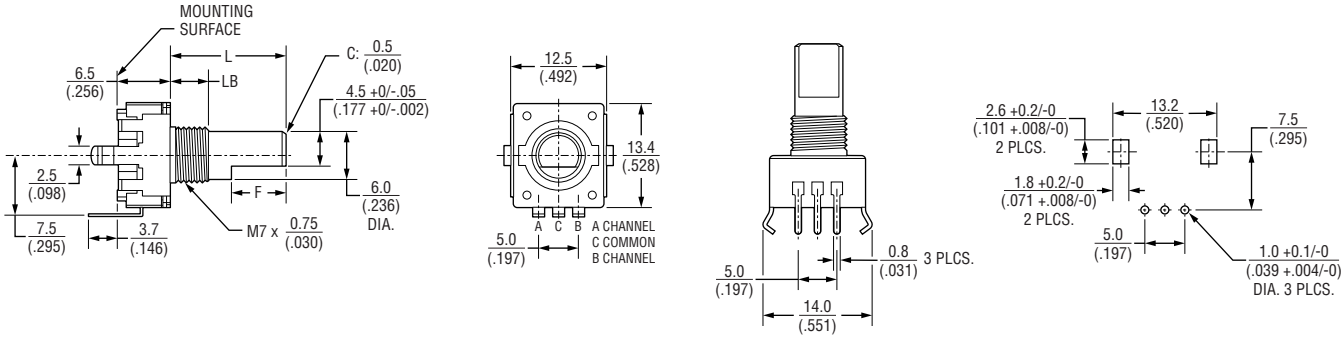

PEC11R-4xxxF-Sxxxx

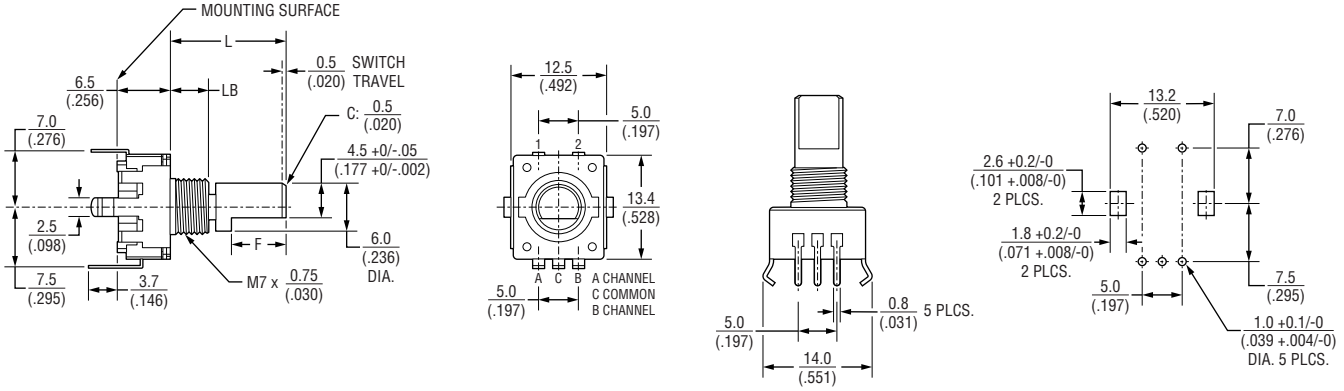

Specifications are subject to change without notice.
Users should verify actual device performance in their specific applications.
The products described herein and this document are subject to specific legal disclaimers as set forth on the last page of this document, and at www.bourns.com/docs/legal/disclaimer.pdf.

Shaft Dimensions

Flatted Shaft

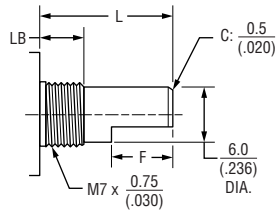

L	LB	F
15 (.591)	5 (.197)	7 (.276)
20 (.787)	7 (.276)	10 (.394)
25 (.984)	7 (.276)	12 (.472)
30 (1.181)	7 (.276)	12 (.472)

DIMENSIONS: MM (INCHES)

Knurled Shaft

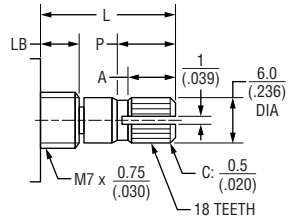

Knurled Shaft Without Switch

L	LB	P	A
15 (.591)	5 (.197)	8 (.315)	6 (.236)
20 (.787)	7 (.276)	7 (.276)	6 (.236)
25 (.984)	7 (.276)	12 (.472)	10 (.394)
30 (1.181)	7 (.276)	16 (.630)	12 (.472)

Knurled Shaft With Switch

L	LB	P	A
15 (.591)	5 (.197)	7 (.276)	6 (.236)
20 (.787)	7 (.276)	7 (.276)	6 (.236)
25 (.984)	7 (.276)	12 (.472)	10 (.394)
30 (1.181)	7 (.276)	16 (.630)	12 (.472)

How To Order

PEC11R 4 0 20 F - S 0012

Model

Terminal Configuration
- 1 = PC Pin Vertical / Side Facing 7 mm
- 2 = PC Pin Vertical / Side Facing 10 mm
- 4 = PC Pin Horizontal / Rear Facing

Detent Option
- 0 = No Detents (12, 18, 24 pulses)
- 1 = 18 Detents (18 pulses)
- 2 = 24 Detents (12, 24 pulses)
- 3 = 12 Detents (12, 24 pulses)

Standard Shaft Length
- 15 = 15.0 mm
- 20 = 20.0 mm
- 25 = 25.0 mm
- 30 = 30.0 mm

Shaft Style
- F = Metal Flatted Shaft
- K = Metal Knurled Shaft[1]

Switch Configuration
- S = Push Momentary Switch
- N = No Switch

Resolution
- 0012 = 12 Pulses per 360 ° Rotation
- 0018 = 18 Pulses per 360 ° Rotation
- 0024 = 24 Pulses per 360 ° Rotation

[1]Metal knurled shaft without switch is available in 15, 20 and 30 mm shaft lengths.
Metal knurled shaft with push momentary switch is available in 15 and 20 mm shaft lengths.

Hardware

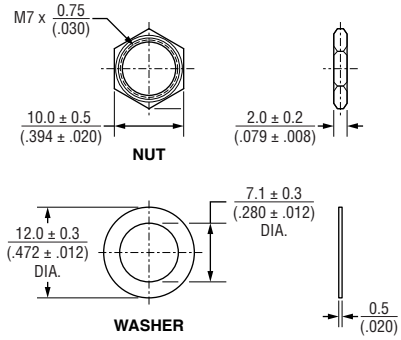

Quadrature Output Table

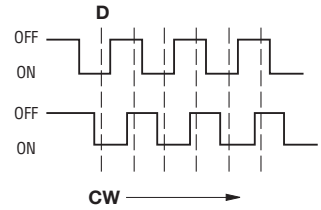

Suggested Filter Circuit

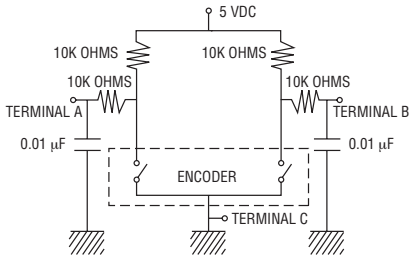

Switch Circuit

REV. 09/23

Specifications are subject to change without notice. Users should verify actual device performance in their specific applications.
The products described herein and this document are subject to specific legal disclaimers as set forth on the last page of this document, and at www.bourns.com/docs/legal/disclaimer.pdf.