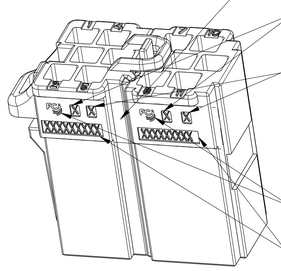

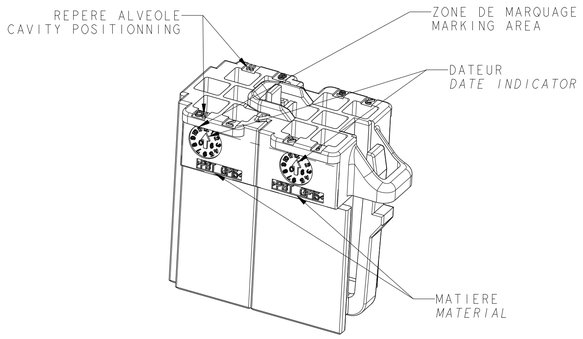

PORTE CLIP 12V
12W FEMALE CONNECTOR
-Pour les autres cotes se référer aux détails des connecteurs.
Refer to specific detailed drawing for housing dimensions.
-Pas de référence spécifique. Produit assemblé lors de l'opération de cablage.
No part number. This part is assembled during the harness maker process.

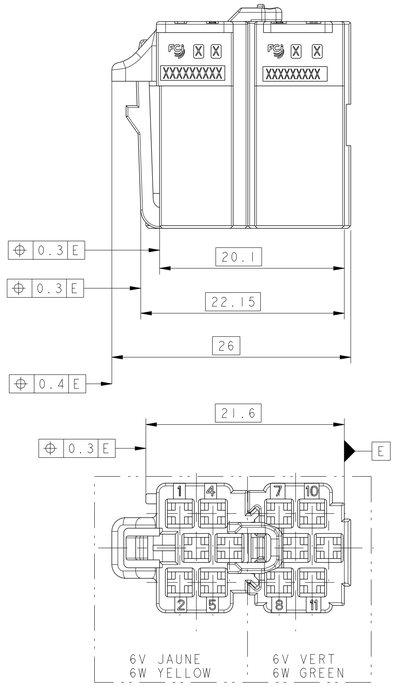

PRODUITS ASSOCIES / *ASSOCIATED PARTS*				
DESIGNATION *DESIGNATION*	**SECTION FIL** *WIRE SECTION*	**REFERENCE MVL** *MVL REFERENCE*	**REFERENCE DELPHI** *DELPHI REFERENCE*	**PRECONISATION SERTISSAGE** *CRIMPING SPECIFICATION*
CLIP 1.5 DCS2 *DCS2 1.5 FEMALE TERMINAL*	0.2 à 0.35 mm²	6000 05 11	10763182	9 084 10 00
	0.5 à 1 mm²	6000 05 31	15380673	

ISOLANT *FEMALE HOUSING*	PBT 15% FV *PBT GF 15*	VOIR TABLEAU *SEE TABLE*	VOIR TABLEAU *SEE TABLE*
DESIGNATION *DESCRIPTION*	**MATIERE** *MATERIAL*	**COULEUR** *COLOR*	**REFERENCE MVL** *MVL P/N*

DETAIL DU PORTE CLIP 6V JAUNE
DETAIL OF 6W YELLOW FEMALE CONNECTOR
MASSE DU PRODUIT / WEIGHT : 0.002 Kg±10%
MVL P/N : PPI 000 0725 REVISION A
DELPHI P/N : 13642031 REVISION 01
IMDS ID : 47823524
COULEUR / COLOR : JAUNE / YELLOW

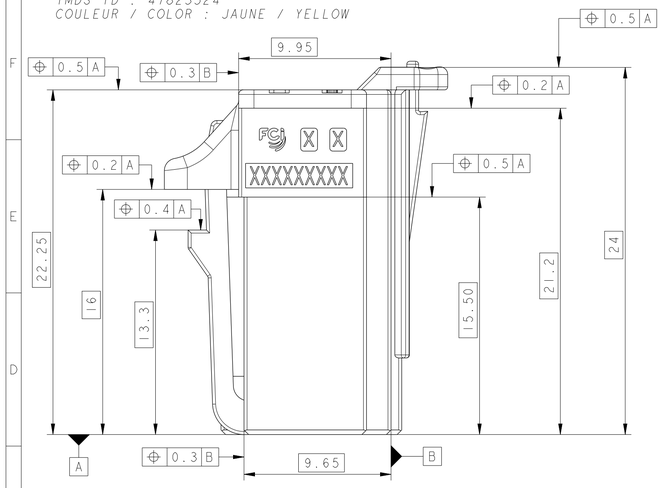

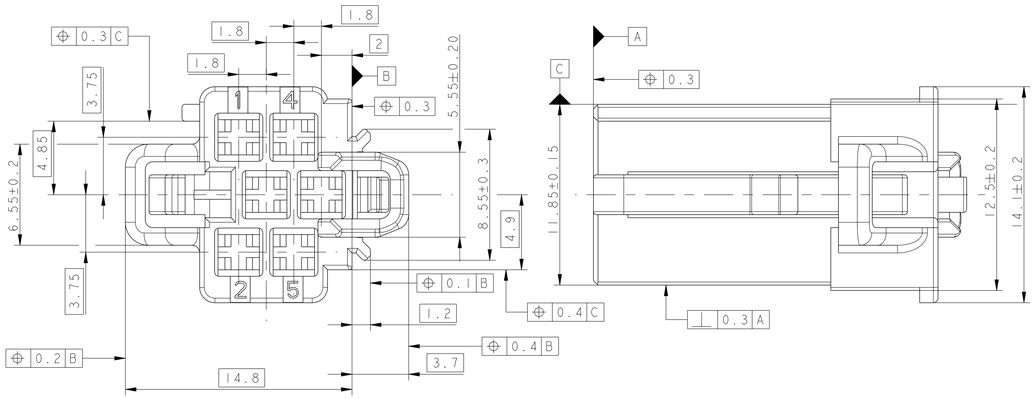

DETAIL ALVEOLES
CAVITY DETAIL

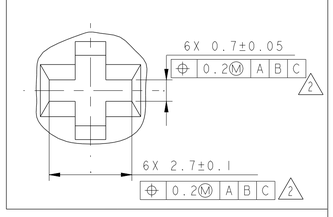

DETAIL DU PORTE CLIP 6V VERT
DETAIL OF 6W GREEN FEMALE CONNECTOR
MASSE DU PRODUIT / WEIGHT : 0.002 Kg ±10%
MVL P/N : PPI 000 0724 REVISION A
DELPHI P/N : 15504144 REVISION 01
IMDS ID : 47823418
COULEUR / COLOR : VERT / GREEN

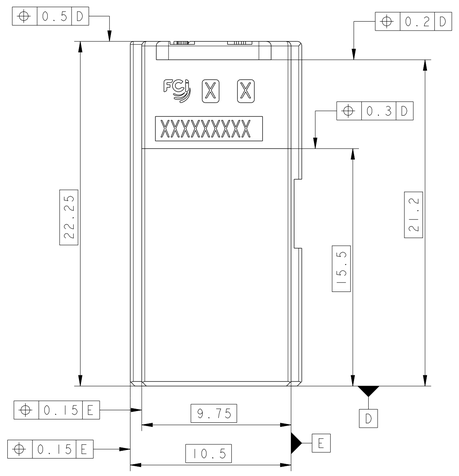

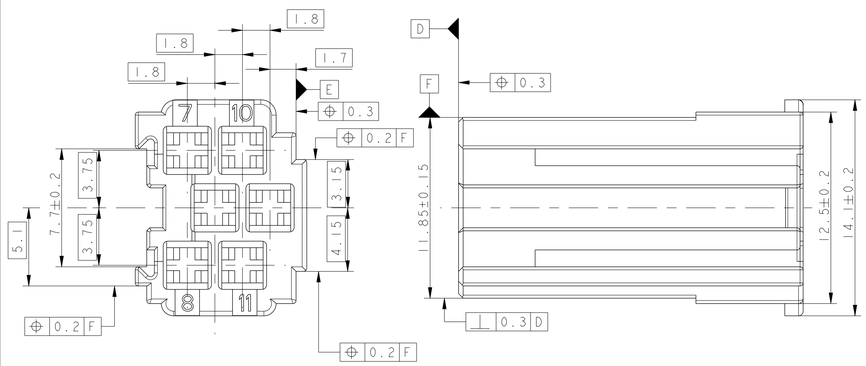

DETAIL ALVEOLES
CAVITY DETAIL

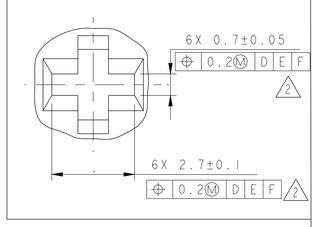

ECN-NO. *NUMERO ECN*	POSITION *POSITION*	CHANGE DESCRIPTION *MODIFICATION*
-	-	INITIAL RELEASE

PRODUCT SPEC. *SPECIF. PRODUIT* -
PACKAGING SPEC. *SPECIF. EMBALLAGE* -
APPLICATION SPEC. *SPECIF. APPLICATION* -

COPYRIGHT DELPHI CORPORATION AND/OR ITS AFFILIATES. ALL RIGHTS RESERVED. REVISED
THIS DRAWING IS THE PROPERTY OF DELPHI CORPORATION AND CONTAINS DELPHI CONFIDENTIAL INFORMATION. THE REPRODUCTION, DISTRIBUTION AND UTILIZATION OF THIS DOCUMENT OR ITS RELATED CAD WITH DATA, AS WELL AS COMMUNICATION OF ANY CONTENT TO OTHERS, WITHOUT EXPRESS AUTHORIZATION, IS PROHIBITED.
CE PLAN EST LA PROPRIETE DE DELPHI CORPORATION ET CONTIENT DES INFORMATIONS DELPHI CONFIDENTIELLES. LA REPRODUCTION, LA DISTRIBUTION ET L'UTILISATION DE CE DOCUMENT OU DE SES DONNEES MOTIONTIGES CAD, AINSI QUE LA COMMUNICATION DE TOUT CONTENU A AUTRUI, SANS AUTORISATION EXPRESSE, EST INTERDITE.

TOLERANCES *TOLERANCES* ±0.2 ±2°
COUNTERPART N° *CONTRE-PARTIE N°* -
DO NOT MEASURE DRAWING *NE PAS PRENDRE DE COTES*
MATERIAL : *MATIERE :* SEE NOTE / VOIR NOTE
SURFACE FINISH *ETAT DE SURFACE* - -
COLOUR *COULEUR :* - -
TOOL NO. *OUTIL N°* - -
ECO Loc. Code *CODE B.E.* FE
TITLE *DESIGNATION* 12V (6v JAUNE + 6v VERT)
12W (6W YELLOW + 6W GREEN)
PROJECT *PROJET*
CAR RADIO CONNECTOR
ESR NO. *NUMERO ESR* EU 050346
CAT. NO. *NUMERO CAT.* - -
DOCUMENT UNDER PDS CONTROL *DOCUMENT GERE SOUS P.D.S.*
NO MODIFICATION ALLOWED OUTSIDE *PAS DE MODIFICATION EN DEHORS*

DELPHI
DELPHI PACKARD ELECTRICAL/ELECTRONIC ARCHITECTURE
EPERNON, FRANCE
ISO PROJECTION *PROJECTION ISO.*
DIMENSION IN MILLIMETERS *DIMENSIONS EN MILLIMETRES*
CAD SYSTEM pro / eng.
DWG SIZE *FORMAT* A1

	DATE	NAME *NOM*
CREATED BY *CREE PAR*	2013/06/27	J HOLLANDE
MODIFIED BY *MODIF. PAR*	2013/07/19	F FAURIE
CHECKED BY *VERIF. PAR*	2013/09/18	S LACOTE
APPROVED BY *APPR. PAR*	2013/09/19	L LETHIEN

TILE NAME *NOM DE FICHIER* PCC0828899
DRAWING NUMBER *REF. PLAN* **PCC0828899** REV. *IND.* **A**
STATE *ETAT* **SERIAL RELEASED**
PART NUMBER *REF. ARTICLE* **See Table** REV. *IND.* -
APPROVAL LEVEL *NIV. D'APPROBATION* -
SHEET *FEUILLE* 1 of 1 *sur* 1
SCALE *ECH.* 3:1

EUR C04 112 F29