REV	ZONE	SYM	REVISION	BY	DATE
D	4C	D	M3X0.5 WAS M3X.05 ECO 15864	KL	2-20-90

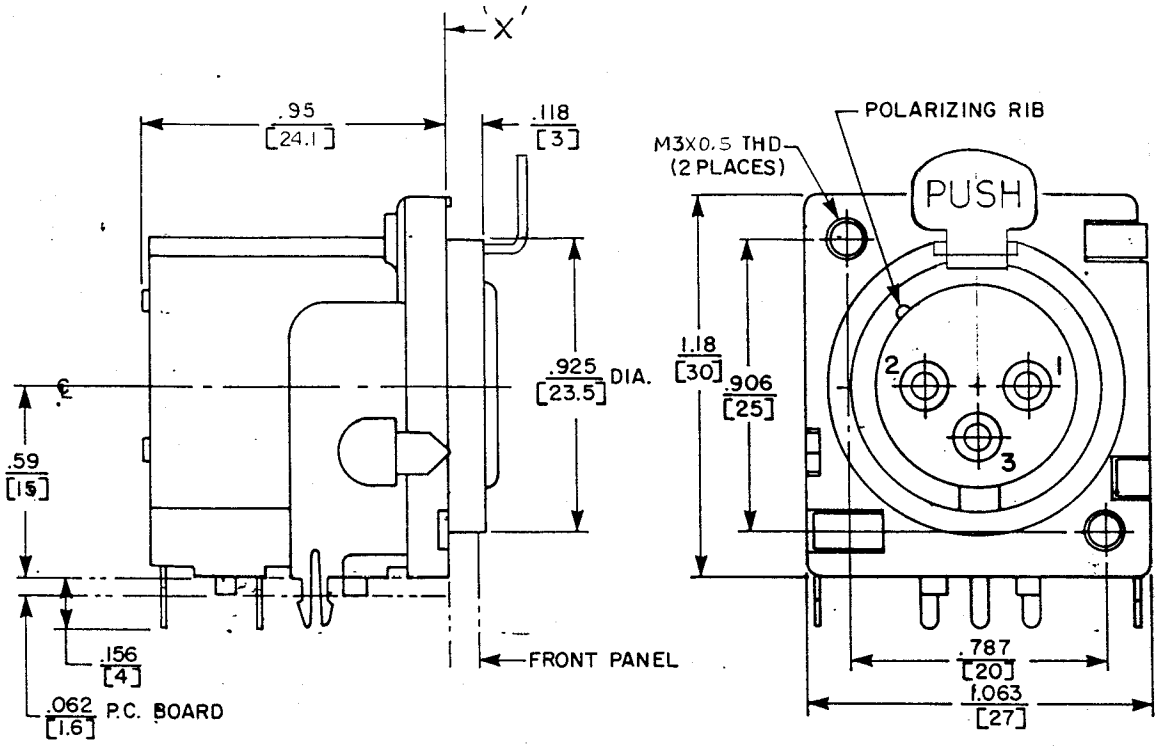

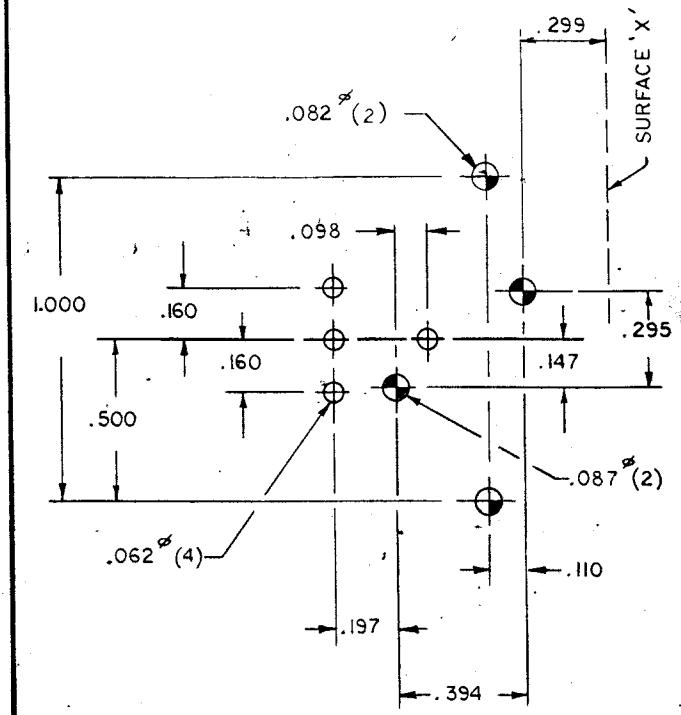

COMPONENT SIDE.

CUSTOMER DWG.

☆ STAR SYMBOL DENOTES CRITICAL DIMENSION, SEE S/C ENGINEERING STANDARD ES-0001

SIZE | WIDTH | MULT | LBS PER M | TEMPER

THIS DRAWING DESCRIBES A DESIGN CONSIDERED PROPRIETARY IN NATURE, DEVELOPED AND MANUFACTURED BY SWITCHCRAFT, INC. AND IS RELEASED ON A CONFIDENTIAL BASIS FOR IDENTIFICATION PURPOSE ONLY.

UNLESS OTHERWISE SPECIFIED:

1. DECIMAL DIMENSIONS ± .005
2. FRACTIONAL DIMENSIONS ± 1/64
3. ANGLES ± 1/2°
4. ALL DIA'S CONCENTRIC WITHIN .005 T.I.R
5. ALL DIMENSIONS IN INCHES
6. FOR THREADS USE UNIFIED PLUG AND RING GAGES ONLY
7. REMOVE ALL BURRS
8. PART TO BE FABRICATED AS SPECIFIED MAKE NO DIMENSIONAL ALLOWANCES FOR APPLIED FINISHES, I.E., PLATING, PAINTING, ETC.
9. HOLES ON SAME CENTERLINE MUST BE ALIGNED WITHIN ± .002

DO NOT SCALE DRAWING

DRAWN BY KL	DATE 1-29-90	FINISH
CHECKED BY	DATE 1-30-90	PER FINISH SPEC. NO.
APPROVED BY	DATE 1-30-90	MATERIAL
SCALE ~		PER MAT. SPEC. NO.
FIRST USED ON		Switchcraft® A Raytheon Company
NAME PQG RECEPTACLE, FEMALE, R.A.	PART NO. PQG 3FRA	ISSUE D
	SHEET OF	

ROUTING