BUD	PART NAME	NEMA 4X PLASTIC BOX (PTS SERIES)	PART No.	PTS-25349 & PTS-25349-C	REVISION DATE	2-17-22

DRAWING FOR REFERENCE

WE RESERVE THE RIGHT TO MAKE CHANGES TO OUR STANDARD PRODUCTS. PLEASE CONSULT WITH BUD INDUSTRIES PRIOR TO USING THIS DRAWING FOR DESIGN PURPOSE.

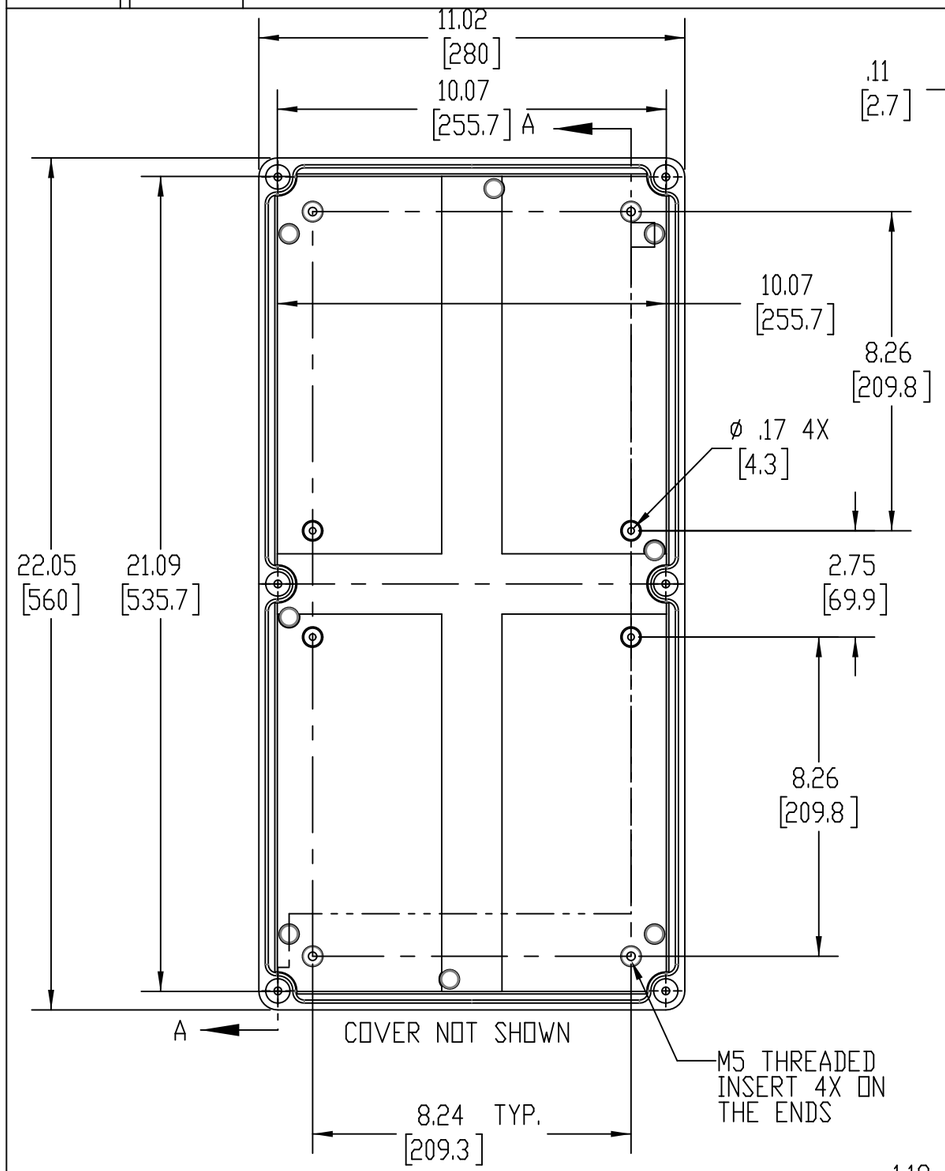

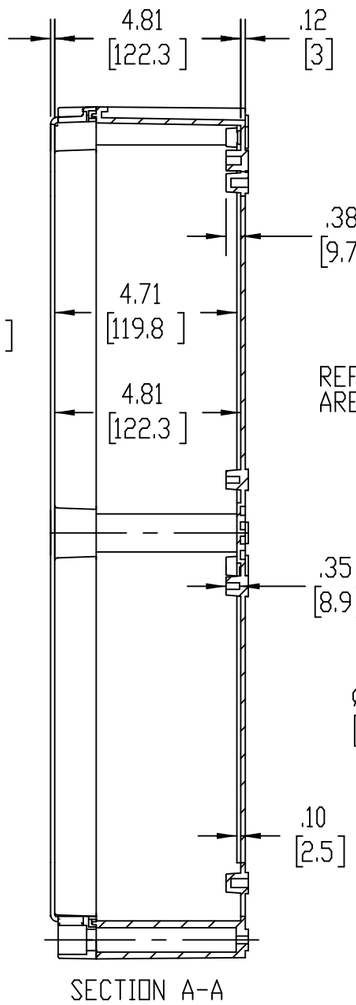

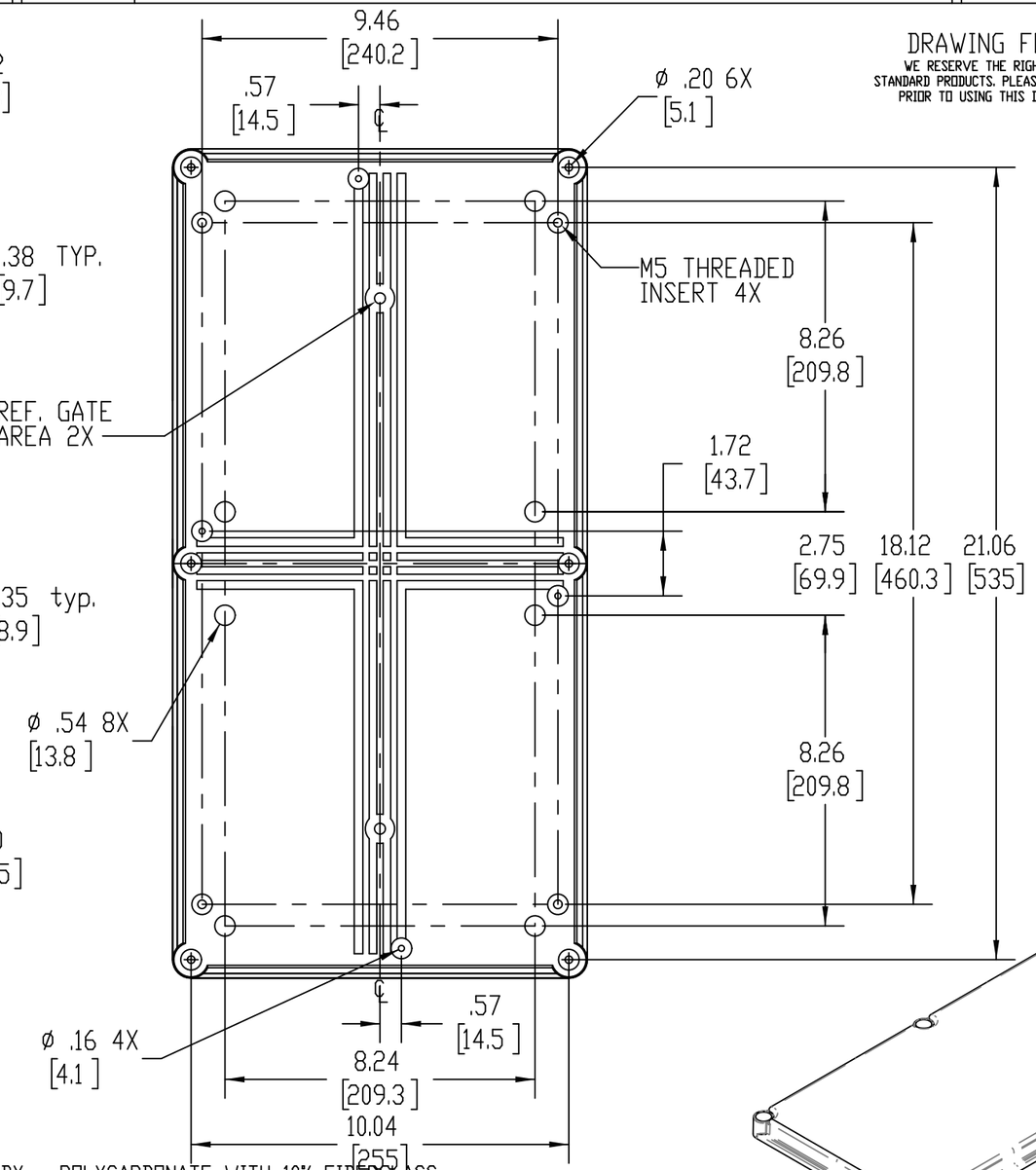

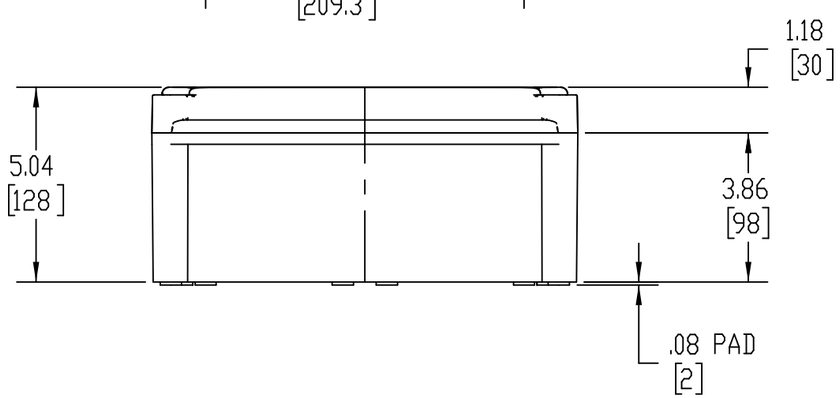

NOTES:
1- MATERIAL: BODY - POLYCARBONATE WITH 10% FIBERGLASS
COVER - POLYCARBONATE
2- COLOR: NO SUFFIX - GRAY BODY & GRAY COVER
(-C) SUFFIX - GRAY BODY & CLEAR COVER
3- COVER ATTACHES WITH NON-METALLIC CAPTIVE SCREWS (ITEMS NOT SHOWN)
4- SUPPLIED WITH FOUR M4 x 10mm LG. PAN HEAD SCREWS (ITEMS NOT SHOWN)
5- DIMENSIONS ARE INCH [MM]
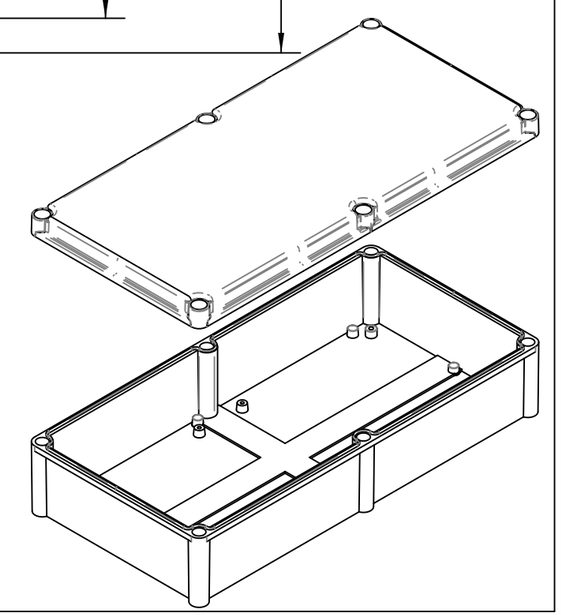
OPTIONAL ACCESSORIES:
STEEL EXTERNAL BRACKET #NBX-10922
PLASTIC EXTERNAL BRACKET #PIX-4117