THIS DOCUMENT CONTAINS PROPRIETARY DATA OF POLARIS INDUSTRIAL ENTERPRISES,INC. NO DISCLOSURE, REPRODUCTION, OR USE OF ANY PART THERE OF MAY BE MADE EXCEPT BY WRITTEN PERMISSION.

REV.	BY	DATE	APPRVL.	P/N RV6NAYFD

SPECIFICATIONS

RESISTANCE RANGE ---------- 1K,5K,10K
RESISTANCE TOLERANCE ---------- ±10%
POWER RATING ----------.5 WATT @70°C
DERATED TO 0 WATTS AT 120°C
MECHANICAL ANGLE ---------- 295°
OPERATING VOLTAGE ---------- 350V SUBJECT TO POWER RATING
INSULATION RESISTANCE ---------- DRY: 10K MEG OHM
WET: 100K MEG OHM
DIELECTRIC STRENGTH ---------- 750 V RMS AT SEA LEVEL
OPERATING TORQUE ---------- 0.5 OZ/IN TO 6 OZ/IN
OPERATING TEMPERATURE ---------- -65°C TO +125°C
ROTATIONAL LIFE ---------- 25,000 CYCLES

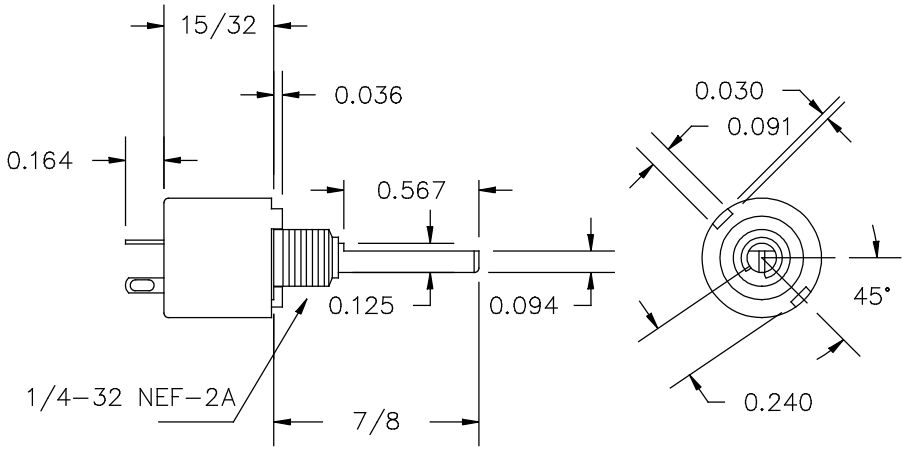

MATERIALS

ONE PIECE HOUSING AND BUSHING
TERMINALS ---------- GOLD PLATED
SHAFT ---------- STAINLESS STEEL
RESISTIVE ELEMENT ---------- HOT MOLDED CARBON

ENVIRONMENTAL

RESISTANCE TO SOLDERING HEAT ------ 350°C FOR 5 SECONDS
HUMIDITY RANGE ---------- PER MIL-R-94
VIBRATION RANGE ---------- PER MIL-R-94
SHOCK RESISTANCE ---------- PER MIL-R-94
LOAD LIFE ---------- 1000 Hr AT 70°C

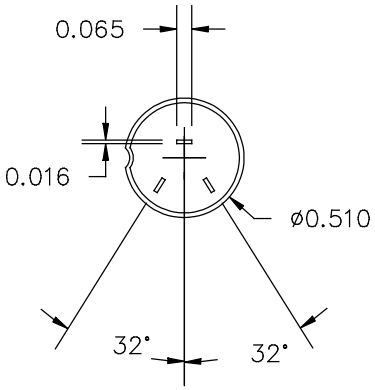

OPTIONS

OTHER STANDARD RESISTANCE VALUES AVAILABLE
CUSTOM SHAFTS AND BUSHINGS
SPECIAL TAPERS

SCHEMATIC

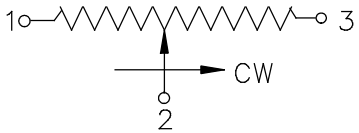

TOLERANCES
XX = +/- .010" FRACT. = +/- 1/64"
XXX= +/- .005" ANGLES = +/- 1/2°
ALL SPECIFICATIONS SUBJECT TO CHANGE WITHOUT NOTICE.

SCALE	DATE:	08/09/11
	BY	AT
NONE	APPRV'D	
CODE IDENT: 19477		

ETI SYSTEMS
ETI SYSTEMS
CARLSBAD
CALIFORNIA

TITLE
SINGLE TURN POTENTIOMETER

PART NO.
RV6NAYFD