Package Outline

* = Similar Package

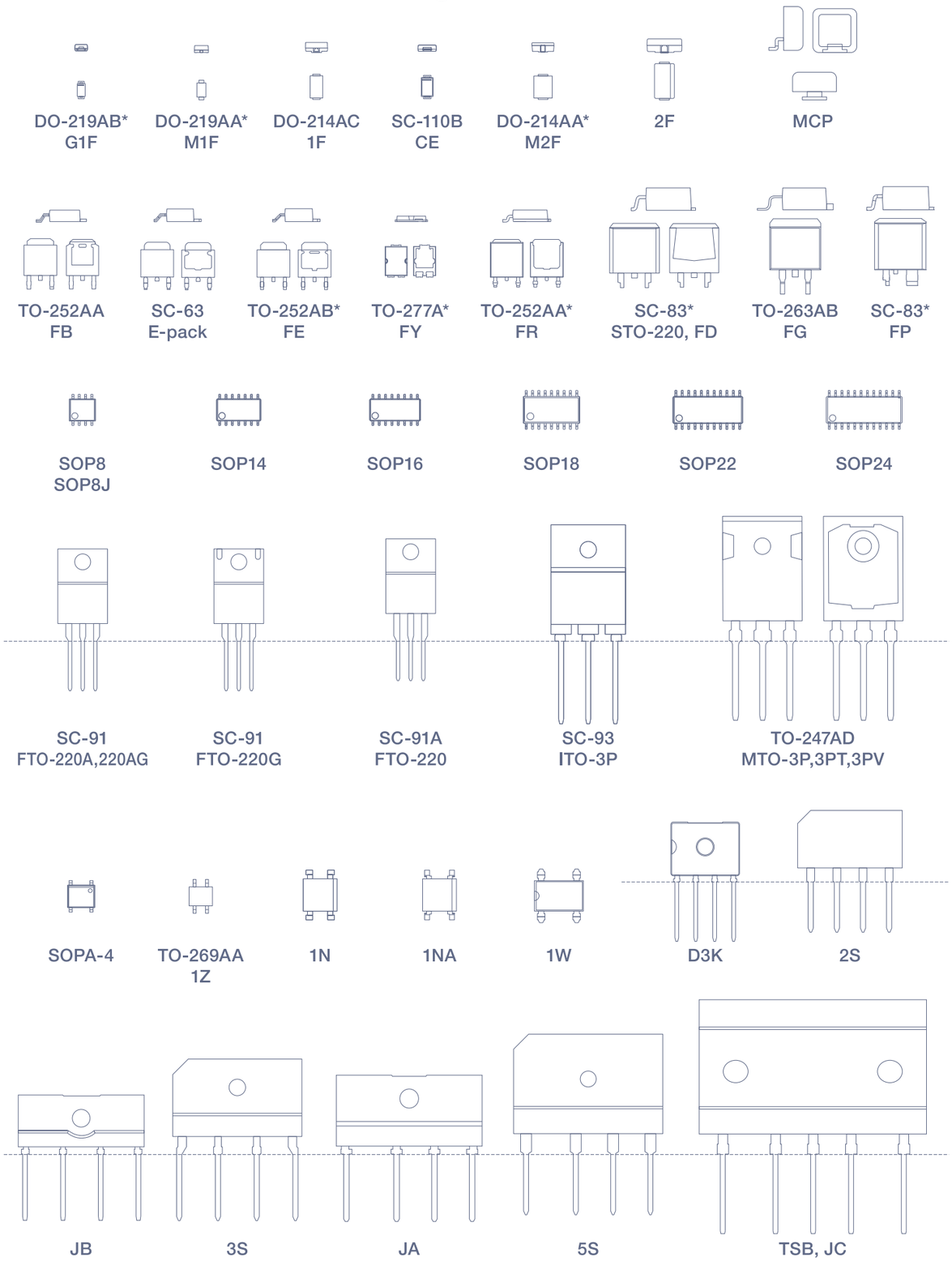

Shindengen Electric Manufacturing Co., Ltd.

www.shindengen.co.jp

CAT.NO.F072-14a

2103-000(I)

Semiconductor Product Catalog

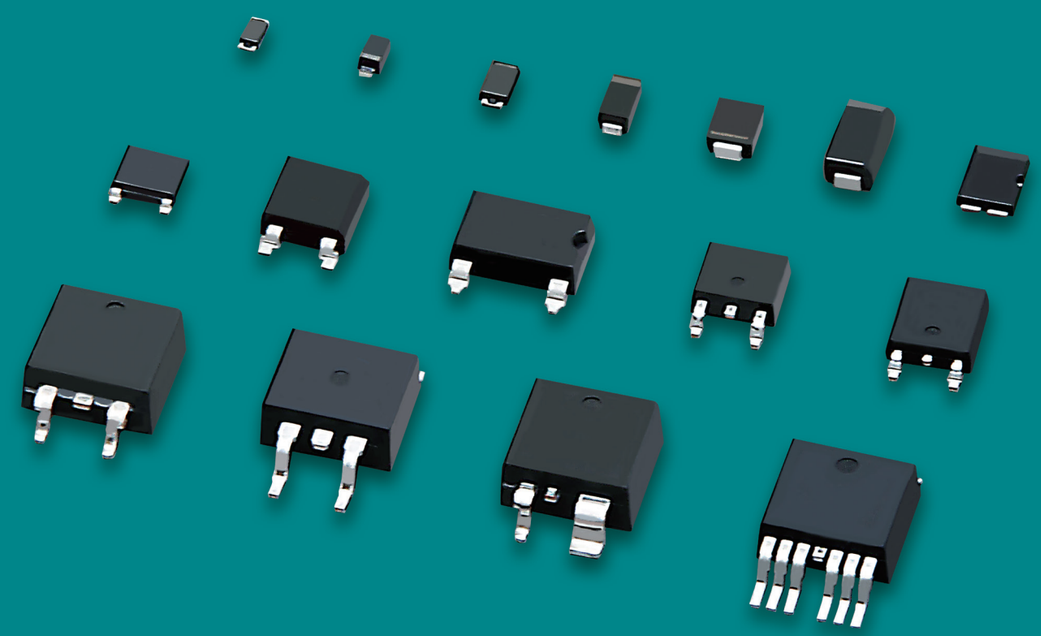

ShinDengen

New power. Your power.

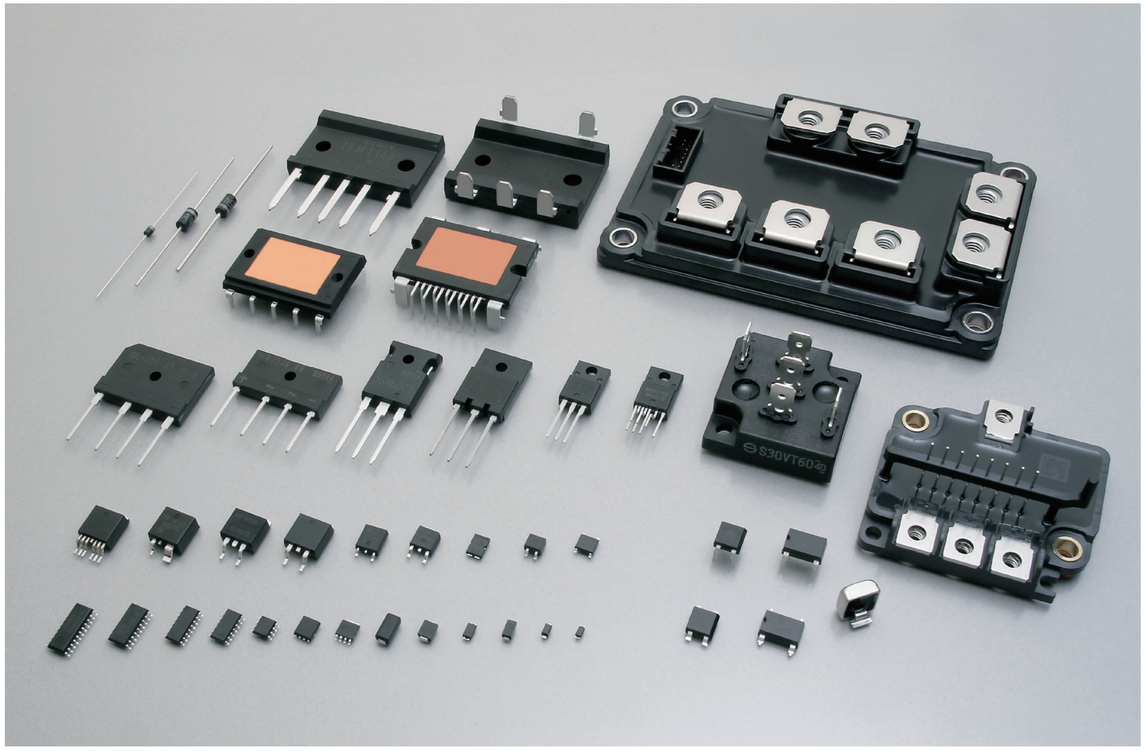

Notes

⚠ If you wish to use any such product, please be sure to refer to the specifications issued by Shindengen.

⚠ All products described or contained herein are designed with a quality level intended for use in standard applications requiring an ordinary level of reliability. If these products are to be used in equipment or devices for special or specific applications requiring an extremely high grade of quality or reliability in which failures or malfunctions of products may directly affect human life or health, a local Shindengen office must be contacted in advance to confirm that the intended use of the product is appropriate. Shindengen products are grouped into the following three applications according the quality grade.

- Standard applications
  Computers, office automation and other office equipment, communication terminals, test and measurement equipment, audio/visual equipment, amusement equipment, consumer electronics, machine tools, personal electronic equipment, industrial equipment, etc.
- Special applications
  Transportation equipment (vehicles, ships, etc.), trunk-line communication equipment, traffic signal control systems, anti-disaster/crime systems, safety equipment, medical equipment, etc.
- Specific applications
  Nuclear reactor control systems, aircraft, aerospace equipment, submarine repeaters, life support equipment and systems, etc.

⚠ Although Shindengen continuously endeavors to enhance the quality and reliability of its products, customers are advised to consider and take safety measures in their design, such as redundancy, fire containment and anti-failure, so that personal injury, fires, or societal damages can be prevented.

⚠ Please note that all information described or contained herein is subject to change without notice due to product upgrades and other reasons. When buying Shindengen products, please contact the Company's offices or distributors to obtain the latest information.

⚠ Shindengen shall not bear any responsibility with regards to damages or infringement of any third-party patent rights and other intellectual property rights incurred due to the use of information on this website.

⚠ The information and materials on this website neither warrant the use of Shindengen's or any third party's patent rights and other intellectual property rights, nor grant license to such rights.

⚠ In the event that any product described or contained herein falls under the category of strategic products controlled under the Foreign Exchange and Foreign Trade Control Law of Japan, exporting of such products shall require an export license from the Japanese government in accordance with the above law.

⚠ No reprinting or reproduction of the materials on this website, either in whole or in part, is permitted without proper authorization from Shindengen.

SALES OFFICES

U.S.A.

Shindengen America, Inc. www.shindengen.com/

1540E, Dundee Road Suite 350 Palatine IL.60074. U.S.A.
Phone:+1-847-444-1363 FAX:+1-847-444-0654

Europe

Shindengen UK Ltd. www.shindengen.co.eu/

Head Office
Unit 1, 1 Tapper Walk, King's Cross, London, N1C 4AQ U.K.
Phone:+44-20-3829-6980 FAX:+44-20-3725-6855

German Branch
Prinzenallee 1, 40549 Düsseldorf, Germany
Phone:+49-211-5206-590 FAX:+49-211-4986-499

Asia

Shindengen Singapore PTE Ltd.

750D, Chai Chee Road, #05-01, ESR BizPark
@ Chai Chee, Singapore 469004.
Phone:+65-6445-0082 FAX:+65-6445-6089

Shindengen (H.K.) Co., Ltd.

Head Office
Suite 2006B, 20/F., Exchange Tower, 33 Wang Chiu Road,
Kowloon Bay, HK
Phone:+852-2317-1884 FAX:+852-2314-8561

Taiwan Representative Office
3F-1., No.126, Songjiang Road, Zhongshan District,
Taipei City 10457, Taiwan, R.O.C.
Phone:+886-2-2100-1218 FAX:+886-2-2100-2018

Shindengen (SHANGHAI) Electric Co., Ltd.

Room1506, Sheng GaoInt'l Building, 137 Xian Xia Road,
Chang Ning, Shanghai, China
Phone:+86-21-6270-8000 FAX:+86-21-6270-0419

Shindengen Electric Mfg. Co., Ltd.

Seoul Office
B701-4. 230, Simin-daero, Dongan-gu, Anyang-si,
Gyeonggi-do, 14067 Korea
Phone:+82-31-385-1431 FAX:+82-31-385-1430

Japan

Shindengen Electric MFG. Co., Ltd. www.shindengen.co.jp/

Head Office
New-Ohtemachi Bldg., 2-2-1, Ohtemachi, Chiyoda-ku,
Tokyo 100-0004, Japan
Phone:+81-3-3279-4431 FAX:+81-3-3279-6478

Asaka Office
3-14-1, Saiwai-cho, Asaka City,
Saitama 351-8503, Japan
Phone:+81-48-483-5311 FAX:+81-48-483-4117

Osaka Branch Office
Minami Senba Heart Bldg., 2-3-2, Minami-Senba,
Chuo-ku, Osaka City, Osaka 542-0081, Japan
Phone:+81-6-6264-7770 FAX:+81-6-6260-1222

Nagoya Branch Office
Nagoya Daiichi Bldg., 1-19-24, Nishiki, Naka-ku,
Nagoya City, Aichi 460-0003, Japan
Phone:+81-52-221-1361 FAX:+81-52-201-4780

Hamamatsu branch
Hamamatsu Daiichi Seimei Nittsu Bldg., 110-5, Itaya-cho,
Naka-ku, Hamamatsu City, Shizuoka 430-0928, Japan
Phone:+81-53-450-3800 FAX:+81-53-450-3801

Utsunomiya Sales Office
Flora Bldg., 1-9-15 Higashi Syukugou Utsunomiya City,
Tochigi 321-0953, Japan
Phone:+81-28-637-3615 FAX:+81-28-637-3115

- All specifications are subject to change without notice.
- Please consult us for the latest specifications before you order.
- Please use this products after reading manual well.

• Printed April 2021

This catalog includes the products which might be subject to the foreign exchange and foreign trade laws.

P3-6 INDEX

P7-10 GENERAL RECTIFYING DIODES

P11-20 BRIDGE DIODES

P21-30 SCHOTTKY BARRIER DIODES

P31-36 FAST RECOVERY DIODES

P37-38 THYRISTORS

P39-40 SIDACs

P41-42 TRIACs

P43-44 SURGE ABSORBERS

P45-48 TVS (Transient Surge Suppressor)

P49-54 POWER MOSFETs

P55-56 POWER MODULES

P57-60 POWER ICs

P61-82 PACKAGE LIST・OUTLINE DIMENSIONS

P83-84 PACKING SPECIFICATION

P85 NOTES ・How to Order ・Outline of Packing Form ・About AEC-Q101 & Automotive Grade

INDEX

Type No.	Page	Type No.	Page	Type No.	Page	Type No.	Page
D1F60	8	D2SBA60	14	D8FD60LUS	32	D25JAB80V	14
D1F60A	8	D3CE4S	22	D8JBB60V	14	D25XB60	14
D1FE60	8	D3CE6S	22	D8JBB80V	14	D25XB80	14
D1FH3	22	D3CE15ST	22	D10FDC10ST	26	D25XB100	14
D1FJ4	22	D3CE20LUS	32	D10FR60LA	32	D30FD60K	32
D1FJ8	22	D3CE60K	32	D10FR60V	8	D30FDC4S	26
D1FJ8A	22	D3CE60V	8	D10FY4R5ST	22	D30FDC10ST	26
D1FJ10	22	D3CE60VE	8	D10FY4R5SY	22	D30FDC15ST	26
D1FK60	32	D3F60	8	D10FY6ST	22	D30JCB100K	18
D1FK70	32	D3FE60	8	D10FY6SY	22	D30JCT120V	16
D1FK100	32	D3FJ10	22	D10FY10ST	22	D30VC60	10
D1FK120	32	D3FK60	32	D10FY10SY	22	D30XBN20	18
D1FK120P	32	D3FK120	32	D10FY15ST	22	D30XT80	16
D1FL20U	32	D3FS4A	22	D10FY60VE	8	D35XB80	14
D1FL40U	32	D3FS6	22	D10JBB60V	14	D40FDC10ST	26
D1FM3	22	D3S4M	24	D10JBB80V	14	D40FDC15ST	26
D1FS4	22	D3S6M	24	D10SBS4	18	D45JCT120V	16
D1FS4A	22	D3SB60	14	D10XB60	14	D45JCT160V	16
D1FS6	22	D3SB80	14	D10XB60H	14	D45XT80	16
D1FS6A	22	D3SBA60	14	D10XB80	14	D45XT160	16
D1FT4	22	D4F60	8	D15FR4ST	22	D50JCB80V	14
D1FT4A	22	D4SB60L	14	D15FR60LA	32	D50XB80	14
D1FT6	22	D4SB80	14	D15FR60V	8	D70JHB80V	14
D1FT6A	22	D4SBL20U	18	D15FY4R5ST	22	D75JFT80V	16
D1FT10	22	D4SBN20	18	D15FY4R5SY	22	D100JHT80V	16
D1FT10A	22	D4SBS4	18	D15FY6ST	22	D100JHT120V	16
D1FT15A	22	D4SBS6	18	D15FY6SY	22	D100JHT160V	16
D1N60	8	D5CE4S	22	D15FY10ST	22	D120SC4M	30
D1N80	8	D5FE60	8	D15FY10SY	22	D120SC6M	30
D1NF60	32	D5FY4R5ST	22	D15FY15ST	22	D180SC4M	30
D1NK60	32	D5FY4R5SY	22	D15JAB60V	14	D180SC6M	30
D1NK100	32	D5FY6ST	22	D15JAB80V	14	D240SC4M	30
D1NL20U	32	D5FY6SY	22	D15XB60	14	D240SC6M	30
D1NL40U	32	D5FY10ST	22	D15XB60H	14	D360SC4M	30
D1NS4	24	D5FY10SY	22	D15XB80	14	D360SC6M	30
D1NS6	24	D5FY15ST	22	D15XB100	14	DE3L20UA	32
D1UBA80	12	D5FY20SN	22	D15XBN20	18	DE3S4M	22
D2F60	8	D5FY60K	32	D15XBS6	18	DE3S6M	22
D2FK60	32	D5SB60	14	D20FD60LU	32	DE5L60A	32
D2FL20U	32	D5SB80	14	D20FDC10ST	26	DE5L60U	32
D2FL40	32	D5SBA60	14	D20FDC15ST	26	DE5LC20U	34
D2FL40U	32	D6FEC4ST	26	D20FDC20L	34	DE5S4M	22
D2FS4	22	D6FEC10ST	26	D20FDC20LUS	34	DE5S6M	22
D2FS6	22	D6FEC12ST	26	D20FR4ST	22	DE5SC3ML	26
D2L20U	32	D6FEC15ST	26	D20FR4R5S	22	DE5SC4M	26
D2L40U	32	D6JBB60V	14	D20XB60	14	DE5SC6M	26
D2S4M	24	D6JBB80V	14	D20XB80	14	DE5VE40	8
D2S6M	24	D6SB60L	14	D20XBS6	18	DE10S3L	22
D2SB60	14	D6SB80	14	D25FD60V	8	DE10SC3L	26
D2SB60A	14	D6SBN20	18	D25JAB60V	14	DE10SC4	26

Type No.	Page	Type No.	Page	Type No.	Page	Type No.	Page
DF5VD60	10	G1V(A)20C	40	KP40RU22	44	MCZ5216ST	60
DF8L60US	32	G1V(B)20C	40	KU4F8	44	MCZ5601SC	60
DF10L60	32	G1V(B)22C	40	KU4F12	44	MCZ5606SC	60
DF10LC20U	34	G1V(B)24C	40	KU5S31NS	44	MCZ5607SC	60
DF10LC30	34	G1VL8C	40	KU10L08	44	MF2003SV	60
DF10NC15	26	G1VL10C	40	KU10N14	44	MF2007SW	60
DF10SC4M	26	G1VL15C	40	KU10NU11	44	MG001AK028060A	56
DF10SC6	26	G1VL20C	40	KU10NU13	44	MG001AL030060A	56
DF10SC9	26	G1VL22C	40	KU10R23NS	44	MG031B090004A	56
DF15JC10	26	G1VL24C	40	KU10R27NS	44	MG031E120004A	56
DF15NC15	26	K1V10	40	KU10R29NS	44	MG031G148004A	56
DF15SC4M	26	K1V11	40	KU10S31NS	44	MG031L080006A	56
DF15VD60	10	K1V12	40	KU10S35NS	44	MG031MC148004A	56
DF16VC60R	10	K1V14	40	KU15N14	44	MG031MD110006A	56
DF20JC10	26	K1V22	40	LK25XB60	20	MG031N110006A	56
DF20L60	32	K1V22(W)	40	LL15XB60	20	MG032A4207R5A	56
DF20L60U	32	K1V24	40	LL25XB60	20	MG032B420010A	56
DF20LC20US	34	K1V24(W)	40	LN1F60	8	MG038A200080A	18
DF20LC30	34	K1V26	40	LN1WBA60	20	MG038B150080A	18
DF20NC15	26	K1V26(W)	40	LN4SB60	20	MG038C200160A	18
DF20SC4M	26	K1V36(W)	40	LN6SB60	20	MG038D150160A	18
DF20SC9M	26	K1V38(W)	40	LN15XB60	20	MG048A150004A	56
DF25SC6M	26	K1V(A)10	40	LN15XB60H	20	MG048B100006A	56
DF25V60	8	K1V(A)11	40	LN25XB60	20	MG060C100080A	18
DF30JC4	26	K1V(A)12	40	M1F60	8	MG061A150080A	18
DF30JC6	26	K1V(A)16	40	M1F80	8	MG061B200080A	18
DF30JC10	26	K1VZL09	40	M1FE40	8	MH2501SC	60
DF30NC15	26	K1VZL20	40	M1FE60	8	MH2511SC	60
DF30SC3ML	26	KC3FB40H	38	M1FH3	22	MS1003SH	60
DF30SC4M	26	KC5FB40H	38	M1FJ4	22	MS1004SH	60
DF40SC3L	26	KC5FB60H	38	M1FK60	32	MS1005SK	60
DF40SC4	26	KC5FB60HR	38	M1FL20U	32	MS1006SK	60
DG1H3	22	KC5FB60HRT	38	M1FL40U	32	MS1007SH	60
DG1H3A	22	KC5SF60HRT	38	M1FM3	22	MV1001SC	58
DG1J10A	22	KC8SF80	38	M1FS4	22	MV1002SC	58
DG1M3	22	KD3FB60	42	M1FS6	22	MV1011SC	58
DG1M3A	22	KD3SF60	42	M2F60	8	MV1012SC	58
DG1N15A	22	KD3SF60E	42	M2FH3	22	MV2002SG	58
DG1S4	22	KD5SF60	42	M2FL20U	32	MV2052SG	58
DG1S6	22	KD8SF60	42	M2FM3	22	P0R5B60HP2	54
DG1S6A	22	KD12SF60	42	M3F60	8	P1B52HP2	54
DL04-18F1	46	KD16SF60	42	M3FE40	8	P1FE90VX3	54
DL04-33F1	46	KD20SF60	42	M3FE60	8	P1R5B40HP2	54
DL04-36F1	46	KL3L07	44	M3FL20U	32	P2B60HP2F	54
G1V(A)8C	40	KL3N14	44	MCZ5203SE	60	P2R5B52HP2F	54
G1V(A)10C	40	KL3R20	44	MCZ5205SE	60	P3B28HP2	54
G1V(A)12C	40	KL3Z07	44	MCZ5207SG	60	P3F60HP2	54
G1V(A)13C	40	KL3Z18	44	MCZ5208SG	60	P3FH90VX3	54
G1V(A)14C	40	KP20NU11	44	MCZ5209SN	60	P4B40HP2	54
G1V(A)15C	40	KP40NU11	44	MCZ5211ST	60	P4B60HP2F	54

INDEX

Type No.	Page
P4F60HP2	54
P4F90VX3	54
P5B52HP2	54
P5F50HP2	54
P5F50HP2F	54
P5F60HP2	54
P5FH90VX3	54
P6B28HP2	54
P6B40HP2	54
P6B52HP2	54
P6F50HP2	54
P7F60HP2	54
P7F90VX3	54
P8B10SB	50
P8B28HP2	54
P8B30HP2	54
P8F28HP2	54
P8F50HP2	54
P8FE10SBK	52
P9B30HP2F	54
P9B40HP2	54
P10B28HP2	54
P10F50HP2	54
P10F60HP2	54
P12F60HP2	54
P12FE7R5SBK	52
P13F28HP2	54
P13F50HP2	54
P14FE6SBK	52
P15F50HP2	54
P15F60HP2	54
P15F60HP2F	54
P15LA12SL	50
P16B6SB	50
P17F28HP2	54
P18LA12SL	50
P18LF6QLK	50
P18LF6QNK	50
P19LA10SL	50
P20B12SL	50
P20B12SN	50
P20F50HP2	54
P20FE12SLK	52
P21F28HP2	54
P22F10SN	52
P22FE4SBK	52
P23F40HP2FM	54
P23LA10SL	50
P24B4SB	50
P24LF4QLK	50

Type No.	Page
P24LF4QNK	50
P25B6EB	50
P25LA12SL	50
P25LF12SL	50
P25LF12SLK	50
P25LF12SN	50
P25LF12SNK	50
P26B10SL	50
P26B10SN	50
P26F28HP2	54
P26FE10SLK	52
P30B10EL	50
P30FE4SLK	52
P30FE6SLK	52
P30FE7R5SLK	52
P30LA10SL	50
P30W60HP2V	54
P32B12SN	50
P32F12SN	52
P32FG15SL	52
P32LF10SL	50
P32LF10SLK	50
P32LF10SN	50
P32LF10SNK	50
P34F6EL	52
P36F28HP2	54
P38LF6QLK	50
P38LF6QNK	50
P40B10SL	50
P40B10SN	50
P40B6SL	50
P40F10SN	52
P40F12SN	52
P40LF12SL	50
P40LF12SLK	50
P40LF12SN	50
P40LF12SNK	50
P42F6EN	52
P46LF7R5SL	50
P46LF7R5SLK	50
P46LF7R5SN	50
P46LF7R5SNK	50
P50F10SN	52
P50LF10SL	50
P50LF10SLK	50
P50LF10SN	50
P50LF10SNK	50
P54B4SN	50
P55F6EN	52
P56LA4SN	50

Type No.	Page
P60B4EL	50
P60B4SN	50
P60B6EL	50
P60B6EN	50
P60B6SN	50
P64LF6QL	50
P64LF6QLK	50
P64LF6QN	50
P64LF6QNK	50
P66F7R5SN	52
P66F7R5SNK	52
P70F5EN	52
P70F7R5EN	52
P70FP12SN	52
P70FP12SNK	52
P70LF4QLK	50
P70LF4QNK	50
P72LF7R5SL	50
P72LF7R5SLK	50
P72LF7R5SN	50
P72LF7R5SNK	50
P80FG6EAL	52
P80FG7R5EN	52
P80FH5ENK	52
P82F7R5SN	52
P85FG6EAL	52
P86F6SN	52
P88FP10SN	52
P88FP10SNK	52
P90FG5R5SL	52
P94FG5R5SL	52
P98LF6QL	50
P98LF6QLK	50
P98LF6QN	50
P98LF6QNK	50
P100FA7R5EN	52
P100FH4ENK	52
P100FP12SN	52
P100FP12SNK	52
P105LF4QL	50
P105LF4QLK	50
P105LF4QN	50
P105LF4QNK	50
P126FP10SN	52
P126FP10SNK	52
P140LF4QL	50
P140LF4QLK	50
P140LF4QN	50
P140LF4QNK	50
P153FP6SN	52

Type No.	Page
P153FP6SNK	52
P168FP7R5SN	52
P168FP7R5SNK	52
P175FP4SN	52
P175FP4SNK	52
P180FP4SN	52
P180FP4SNK	52
P180FP6SN	52
P180FP6SNK	52
P211FZ4QMKA	52
P240FZ4QLA	52
P240FZ4QNKA	52
S1NAD80	10
S1NB60	12
S1NB80	12
S1NBB80	12
S1NBC60	12
S1NBC80	12
S1WB(A)60	12
S1WB(A)60B	12
S1WB(A)80	12
S1ZAS4	30
S1ZB60	12
S1ZB80	12
S2K100	32
S2L20U	32
S2L40U	32
S2L60	32
S2V60	8
S2V80	8
S2VB60	16
S2WB(A)80	12
S3K60	32
S3L20U	32
S3L40U	32
S3L60	32
S3V60	8
S3V80	8
S3V100D	8
S3WB60	16
S4VB60	16
S5VB60	16
S10VB60	16
S10VT60	18
S10VT80	18
S10VTA60	18
S10VTA80	18
S10WB60	16
S15VB60	16
S15VT60	18

Type No.	Page
S15VT80	18
S15VTA60	18
S15VTA80	18
S15WB60	16
S20K60T	34
S20K100V	34
S20LC20UST	36
S20LC30T	36
S20LC40UT	36
S20LC40UV	36
S20LC60UST	36
S20LC60USV	36
S20SC9MT	28
S20VT60	18
S20VT80	18
S20VTA60	18
S20VTA80	18
S20WB60	16
S20WB80	16
S25VB60	16
S25VB80	16
S30K60T	34
S30K60V	34
S30K100V	34
S30SC4MT	28
S30SC6MT	28
S30TC15T	28
S30V60T	10
S30V80V	10
S30VT60	18
S30VT80	18
S30VT160	18
S30VTA60	18
S30VTA80	18
S30VTA160	18
S40HC1R5T	28
S40T15V	24
S50VB60	16
S50VB80	16
S60HC1R5T	28
S60HC3T	28
S60JC10V	28
S60SC3LT	28
S60SC4MT	28
S60SC6MT	28
S90T15V	24
SF3K60M	34
SF3L60U	34
SF5K60M	34
SF5L40UM	34

Type No.	Page
SF5L60U	34
SF5LC40UM	36
SF8K60M	34
SF8K60USM	34
SF10K60M	34
SF10KC60M	36
SF10L60AM	34
SF10L60U	34
SF10L60MSM	34
SF10L60MVM	34
SF10LC40UM	36
SF20K60M	34
SF20KC60M	36
SF20L60AM	34
SF20L60U	34
SF20L60MSM	34
SF20L60MVM	34
SF20LC30M	36
SG5L20USM	34
SG5LC20USM	36
SG5S4M	24
SG5S6M	24
SG5S9M	24
SG8SC4M	28
SG10L20USM	34
SG10LC20USM	36
SG10SC3LM	28
SG10SC4M	28
SG10SC6M	28
SG10SC9M	28
SG10TC15M	28
SG15SC4M	28
SG15SC6M	28
SG20JC6M	28
SG20LC20USM	36
SG20SC3LM	28
SG20SC4M	28
SG20SC6M	28
SG20SC9M	28
SG20TC10M	28
SG20TC12M	28
SG20TC15M	28
SG30JC6M	28
SG30SC3LM	28
SG30SC4M	28
SG30SC6M	28
SG30TC10M	28
SG30TC12M	28
SG30TC15M	28
SG40TC10M	28

Type No.	Page
SG40TC12M	28
ST02-12G1	46
ST02-14G1	46
ST02-16G1	46
ST02-18G1	46
ST02-20G1	46
ST02-24G1	46
ST02-27G1	46
ST02-30G1	46
ST02-33G1	46
ST02-36G1	46
ST02-39G1	46
ST02-43G1	46
ST02-47G1	46
ST02-58G1	46
ST02-75F1	46
ST02-82F1	46
ST02-100F1	46
ST02-120F1	46
ST02-140F1	46
ST02-170F1	46
ST02-200F1	46
ST02-280F1	46
ST02-320F1	46
ST02D-82	48
ST02D-140	48
ST02D-140F2	48
ST02D-170	48
ST02D-170F2	48
ST02D-200	48
ST02DH-280	48
ST02DH-320	48
ST03-43F1	46
ST03-47F1	46
ST03-58F1	46
ST03-68F1	46
ST03-240F1	46
ST03D-82	48
ST03D-140	48
ST03D-170	48
ST03D-200	48
ST03DH-240	48
ST04-12F1	46
ST04-14F1	46
ST04-16F1	46
ST04-18F1	46
ST04-20F1	46
ST04-24F1	46
ST04-27F1	46
ST04-30F1	46

Type No.	Page
ST04-33F1	46
ST04-36F1	46
ST04-39F1	46
ST06-18CE	46
ST06-27CE	46
ST06-30CE	46
ST06-33CE	46
ST06-36CE	46
ST06-39CE	46
ST20-27F2	46
ST20-30F2	46
ST20-33F2	46
ST20-36F2	46
ST20-47F2	46
ST60-40MF	46
ST60-48MF	46
ST70-27F	46
ST70-27FZ	46
ST70-27MF	46
ST70-30MF	46
ST80-14MF	46
UD2KB80	14
UD3KB80	14
UD4KB80	14
UD6KBA80	14
UD8KBA80	14
VR61F1	44

GENERAL RECTIFYING DIODES

General Rectifying Diodes are defined as high-voltage and PN junction type devices.
These devices utilize our original glass passivation which is physically stable with a superior structure for resistance against heat and humidity.
Variations are available for breakdown voltage up to 800V and output current from 1 to 30A.

Single

Surface Mount

Package	JEDEC Code JEITA Code House Name	Fig.	$I_{F(AV)}$ [A]	V_{RRM} [V] 400	600	800	Remarks
3.9 × 1.8 × 1.4(mm)	DO-219AA similar – M1F	B2	1		M1F60 M1FE60	M1F80	
			2	M1FE40			
5.0 × 2.5 × 2.0(mm)	DO-214AC – 1F	B3-1	1		D1F60 D1FE60		
			1.1		LN1F60		
			1.2		D1F60A		
4.7 × 2.4 × 0.98(mm)	– SC-110B CE	B5-1	3		D3CE60V		
			3.5		D3CE60VE		
5.1 × 3.75 × 2.0(mm)	DO-214AA similar – M2F	B6	1.2		M2F60		
			3	M3FE40	M3FE60		
7.6 × 4.0 × 2.8(mm)	– – 2F	B9-1	1.4		D2F60		
			3		D3F60 D3FE60		
			4		D4F60		
			5		D5FE60		
9.5 × 6.6 × 2.65(mm)	– SC-63 E-pack	G1-5	5	DE5VE40			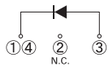
6.5 × 4.5 × 1.1(mm)	TO-277A similar – FY	G4	10		D10FY60VE		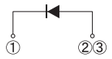
9.6 × 6.6 × 2.3(mm)	TO-252AA similar – FR	G5	10		D10FR60V		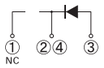
			15		D15FR60V		
13.2 × 10.2 × 4.7(mm)	– SC-83 similar STO-220	H1-2	25		DF25V60		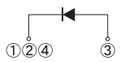
13.2 × 10.2 × 4.6(mm)	– SC-83 similar FD	H2-1	25		D25FD60V		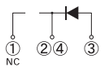

Axial

Package	JEDEC Code JEITA Code House Name	Fig.	$I_{F(AV)}$ [A]	V_{RRM} [V] 400	600	800	Remarks
3.0 × φ 2.6(mm)	– – AX057	A1	1		D1N60	D1N80	
7.0 × φ 4.4(mm)	– – AX10	A5-1	1.7		S2V60	S2V80	
7.0 × φ 4.4(mm)	– – AX14	A7	3			S3V100D	
			3.5		S3V60	S3V80	

Single

Surface Mount

Package: JEDEC Code / JEITA Code / House Name	Fig.	Type No.	Absolute Maximum Ratings: V_{RRM} [V]	I_F (AV) [A]	Conditions Ta [℃]	I_{FSM} [A]	T_j [℃]	Electrical Characteristics: V_F (max) [V]	Conditions I_F [A]	I_R (max) $V_R=V_{RM}$ [μA]	V_{ESD} (typ) [kV]	Halogen free	Based on AEC-Q101	Automotive
DO-219AA similar – M1F	B2	M1F60	600	1	25	25	150	1.10	1	10	–	–	–	○
		M1FE60	600	1	129 *1	30	150	1.10	1	10	25	–	○	○
		M1F80	800	1	25	25	150	1.10	1	10	–	–	–	○
		M1FE40	400	2	103 *2	25	150	1.10	1	10	–	–	○	○
DO-214AC – 1F	B3-1	D1F60	600	1	25	25	150	1.10	1	10	–	–	–	○
		D1FE60	600	1	126 *1	30	150	1.10	1	10	25	–	○	○
		LN1F60 *3	600	1.1	25	25	150	1.05	0.8	10	–	–	–	–
		D1F60A	600	1.2	25	45	150	0.97	1.2	10	–	–	–	○
– SC-110B CE	B5-1	D3CE60V	600	3	101 *1	50	150	1.10	3	10	–	–	–	○
		D3CE60VE	600	3.5	93 *1	60	-55 to 150	1.10	3.5	10	25	–	○	■
DO-214AA similar – M2F	B6	M2F60	600	1.2	51	50	150	0.97	1.2	10	–	–	–	○
		M3FE40	400	3	76 *1	75	150	1.10	3	10	30	–	○	○
		M3F60	600	3	100 *1	90	150	1.05	3	10	–	–	–	○
		M3FE60	600	3	76 *1	90	150	1.05	3	10	25	–	○	○
– – 2F	B9-1	D2F60	600	1.4	25	60	150	1.05	1.4	10	–	–	–	○
		D3F60	600	3	80 *1	150	150	1.05	3	10	–	–	–	○
		D3FE60	600	3	105 *1	150	150	1.05	3	10	25	–	○	○
		D4F60	600	4	68 *1	200	150	0.95	4	10	–	–	–	○
		D5FE60	600	5	82 *1	300	150	0.95	5	10	25	–	○	○
– SC-63 E-pack	G1-5	DE5VE40	400	5	130 *2	80	150	1.00	5	10	30	–	–	■
TO-277A similar – FY	G4	D10FY60VE	600	10	120 *1	220	-55 to 150	1.10	10	10	25	○	○	○
TO-252AA similar – FR	G5	D10FR60V	600	10	130 *2	200	-55 to 150	1.05	10	10	–	–	–	■
		D15FR60V	600	15	125 *2	300	-55 to 150	1.05	15	10	–	–	–	■
– SC-83 similar STO-220	H1-2	DF25V60	600	25	136 *2	400	150	1.10	25	10	–	–	–	–
– SC-83 similar FD	H2-1	D25FD60V	600	25	113 *2	450	150	1.10	25	10	–	–	○	○

*1 : Tl *2 : Tc *3 : trr(max)=3.5μs ■ : Please contact us.

Axial

Package: JEDEC Code / JEITA Code / House Name	Fig.	Type No.	Absolute Maximum Ratings: V_{RRM} [V]	I_F (AV) [A]	Conditions Ta [℃]	I_{FSM} [A]	T_j [℃]	Electrical Characteristics: V_F (max) [V]	Conditions I_F [A]	I_R (max) $V_R=V_{RM}$ [μA]	V_{ESD} (typ) [kV]	Halogen free	Based on AEC-Q101	Automotive
– – AX057	A1	D1N60	600	1	25	30	150	1.05	1	10	–	–	–	–
		D1N80	800	1	25	30	150	1.05	1	10	–	–	–	–
– – AX10	A5-1	S2V60	600	1.7	40	60	150	1.05	1.7	10	–	–	–	–
		S2V80	800	1.7	40	60	150	1.05	1.7	10	–	–	–	–
– – AX14	A7	S3V100D	800	3	130 *1	150	150	1.05	3	10 *2	–	–	–	–
		S3V60	600	3.5	40	120	150	1.05	2.6	10	–	–	–	–
		S3V80	800	3.5	40	120	150	1.05	2.6	10	–	–	–	–

*1 : Tl *2 : V_R=1000V

GENERAL RECTIFYING DIODES

Single

Two Terminal Type

Package	JEDEC Code JEITA Code House Name	Fig.	$I_{F(AV)}$ [A]	V_{RRM} [V]			Remarks
				400	600	800	
41.0 × 16.0 × 5.0(mm)	TO-247AD – MTO-3PT	K2	30		S30V60T		

Three Terminal Type

Package	JEDEC Code JEITA Code House Name	Fig.	$I_{F(AV)}$ [A]	V_{RRM} [V]			Remarks
				400	600	800	
41.0 × 16.0 × 5.0(mm)	TO-247AD – MTO-3PV	K6	30			S30V80V	

Array

Surface Mount

Package	JEDEC Code JEITA Code House Name	Fig.	$I_{F(AV)}$ [A]	V_{RRM} [V]			Remarks
				400	600	800	
10.0 × 6.8 × 2.6(mm)	– – 1NA	C6-2	3			S1NAD80	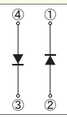
13.2 × 10.2 × 4.7(mm)	– SC-83 similar STO-220	H1-5	5		DF5VD60		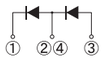
			15		DF15VD60		
		H1-7	16		DF16VC60R		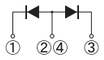

Diode Module

Package	JEDEC Code JEITA Code House Name	Fig.	$I_{F(AV)}$ [A]	V_{RRM} [V]			Remarks
				400	600	800	
22.3 × 22.3 × 25.0(mm)	– – D30VC	E2	30		D30VC60		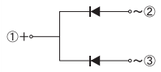

Single

Two Terminal Type

Package		Type No.	Absolute Maximum Ratings					Electrical Characteristics				Halogen free	Based on AEC-Q101	Automotive
JEDEC Code JEITA Code House Name	Fig.		V_{RRM} [V]	$I_{F(AV)}$ [A]	Conditions Tc [℃]	I_{FSM} [A]	T_j [℃]	V_F (max) [V]	Conditions I_F [A]	I_R (max) $V_R=V_{RM}$ [μA]	V_{ESD} (typ) [kV]			
TO-247AD – MTO-3PT	K2	S30V60T	600	30	119	360	150	1.1	30	10	–	–	–	–

Three Terminal Type

Package		Type No.	Absolute Maximum Ratings					Electrical Characteristics				Halogen free	Based on AEC-Q101	Automotive
JEDEC Code JEITA Code House Name	Fig.		V_{RRM} [V]	$I_{F(AV)}$ [A]	Conditions Tc [℃]	I_{FSM} [A]	T_j [℃]	V_F (max) [V]	Conditions I_F [A]	I_R (max) $V_R=V_{RM}$ [μA]	V_{ESD} (typ) [kV]			
TO-247AD – MTO-3PV	K6	S30V80V	800	30	131	450	150	1.1	30	10	–	–	–	○

Array

Surface Mount

Package		Type No.	Absolute Maximum Ratings					Electrical Characteristics				Halogen free	Based on AEC-Q101	Automotive
JEDEC Code JEITA Code House Name	Fig.		V_{RRM} [V]	$I_{F(AV)}$ [A]	Conditions Tc [℃]	I_{FSM} [A]	T_j [℃]	V_F (max) [V]	Conditions I_F [A]	I_R (max) $V_R=V_{RM}$ [μA]	V_{ESD} (typ) [kV]			
– – 1NA	C6-2	S1NAD80	800	3	102 *	110	150	1.05	0.75	10	–	–	–	–
– SC-83 similar STO-220	H1-5	DF5VD60	600	5	140	140	150	1.05	2.50	10	–	–	–	–
		DF15VD60	600	15	127	190	150	1.05	7.50	10	–	–	–	–
	H1-7	DF16VC60R	600	16	124	190	150	1.05	8.00	10	–	–	–	–

* : Tl

Diode Module

Package		Type No.	Absolute Maximum Ratings					Electrical Characteristics				Halogen free	Based on AEC-Q101	Automotive
JEDEC Code JEITA Code House Name	Fig.		V_{RRM} [V]	$I_{F(AV)}$ [A]	Conditions Tc [℃]	I_{FSM} [A]	T_j [℃]	V_F (max) [V]	Conditions I_F [A]	I_R (max) $V_R=V_{RM}$ [μA]	V_{ESD} (typ) [kV]			
– – D30VC	E2	D30VC60	600	30	124	300	150	1.05	15	10	–	–	–	–

BRIDGE DIODES

Bridge Diodes are suitable for the rectification of commercial voltage.

Variations are available for various packaging as well as high voltage (Max 1600V), high I_{FSM}, low V_F, and low noise.

Small Bridge Diodes

Surface Mount

Package	JEDEC Code JEITA Code House Name	Fig.	$I_{F(AV)}$ [A]	V_{RRM} [V] 600	800	1000	Remarks
7.0 × 4.7 × 2.6(mm)	TO-269AA – 1Z	C2-1	0.8	S1ZB60	S1ZB80		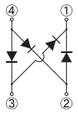
6.2 × 5.15 × 1.45(mm)	– – SOPA-4	C1	1		D1UBA80		
10.0 × 6.8 × 2.6(mm)	– – 1N	C4	1	S1NB60	S1NB80		
10.0 × 6.8 × 2.6(mm)	– – 1NA	C6-1	1		S1NBB80		
			1.5	S1NBC60	S1NBC80		
10.6 × 10.2 × 3.1(mm)	– – 1W	C8	1	S1WB(A)60 S1WB(A)60B	S1WB(A)80		
			2		S2WB(A)80		

THD (Through Hole Device)

Package	JEDEC Code JEITA Code House Name	Fig.	$I_{F(AV)}$ [A]	V_{RRM} [V] 600	800	1000	Remarks
3.8 × 4.7 × 2.5(mm)	– – 1Z	C3	0.8	S1ZB60	S1ZB80		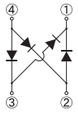
6.5 × 6.8 × 2.5(mm)	– – 1N	C5	1	S1NB60	S1NB80		
6.5 × 6.8 × 2.5(mm)	– – 1NA	C7	1		S1NBB80		
			1.5	S1NBC60	S1NBC80		
6.2 × 10.2 × 3.0(mm)	– – 1W	C9	1	S1WB(A)60 S1WB(A)60B	S1WB(A)80		
			2		S2WB(A)80		

Small Bridge Diodes

Surface Mount

Package: JEDEC Code / JEITA Code / House Name	Fig.	Type No.	Spec. Code	Absolute Maximum Ratings: V_{RRM} [V]	I_F (AV) [A]	Conditions Ta [℃]	I_{FSM} [A]	T_j [℃]	Electrical Characteristics: V_F (max) [V]	Conditions I_F [A]	I_R (max) $V_R=V_{RM}$ [μA]	Halogen free	UL	Automotive
TO-269AA – 1Z	C2-1	S1ZB60	-7072	600	0.8	25	30	150	1.05	0.4	10	–	–	–
		S1ZB80	-7072	800	0.8	25	30	150	1.05	0.4	10	–	–	–
– – SOPA-4	C1	D1UBA80	-7062	800	1	25	30	150	0.95	0.4	10	–	–	–
– – 1N	C4	S1NB60	-7062	600	1	25	30	150	1.05	0.5	10	–	–	–
		S1NB80	-7062	800	1	25	30	150	1.05	0.5	10	–	–	–
– – 1NA	C6-1	S1NBB80	-7062	800	1	26	50	150	1.05	0.5	10	–	–	–
		S1NBC60	-7062	600	1.5	105 *	60	150	1.05	0.75	10	–	–	–
		S1NBC80	-7062	800	1.5	105 *	60	150	1.05	0.75	10	–	–	–
– – 1W	C8	S1WB(A)60	-7062	600	1	25	30	150	1.00	0.5	10	–	–	–
		S1WB(A)60B	-7062	600	1	25	50	150	1.00	0.5	10	–	–	–
		S1WB(A)80	-7062	800	1	25	30	150	1.00	0.5	10	–	–	–
		S2WB(A)80	-7062	800	2	112 *	50	-40 to 150	1.05	1	10	–	–	–

* : Tl

THD (Through Hole Device)

Package: JEDEC Code / JEITA Code / House Name	Fig.	Type No.	Spec. Code	Absolute Maximum Ratings: V_{RRM} [V]	I_F (AV) [A]	Conditions Ta [℃]	I_{FSM} [A]	T_j [℃]	Electrical Characteristics: V_F (max) [V]	Conditions I_F [A]	I_R (max) $V_R=V_{RM}$ [μA]	Halogen free	UL	Automotive
– – 1Z	C3	S1ZB60	-7101	600	0.8	25	30	150	1.05	0.4	10	–	–	–
		S1ZB80	-7101	800	0.8	25	30	150	1.05	0.4	10	–	–	–
– – 1N	C5	S1NB60	-7101	600	1	25	30	150	1.05	0.5	10	–	–	–
		S1NB80	-7101	800	1	25	30	150	1.05	0.5	10	–	–	–
– – 1NA	C7	S1NBB80	-7101	800	1	26	50	150	1.05	0.5	10	–	–	–
		S1NBC60	-7101	600	1.5	105 *	60	150	1.05	0.75	10	–	–	–
		S1NBC80	-7101	800	1.5	105 *	60	150	1.05	0.75	10	–	–	–
– – 1W	C9	S1WB(A)60	-7101	600	1	25	30	150	1.00	0.5	10	–	–	–
		S1WB(A)60B	-7101	600	1	25	50	150	1.00	0.5	10	–	–	–
		S1WB(A)80	-7101	800	1	25	30	150	1.00	0.5	10	–	–	–
		S2WB(A)80	-7101	800	2	112 *	50	-40 to 150	1.05	1	10	–	–	–

* : Tl

BRIDGE DIODES

SIP (Single In-line Package) Bridge Diodes

THD (Through Hole Device)

Package	JEDEC Code JEITA Code House Name	Fig.	$I_{F(AV)}$ [A]	V_{RRM} [V] 600	800	1000	Remarks
24.0 × 13.8 × 3.1(mm)	– – D3K	D1	2		UD2KB80		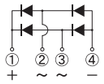
			3		UD3KB80		
			4		UD4KB80		
			6		UD6KBA80		
			8		UD8KBA80		
24.5 × 20.0 × 3.5(mm)	– – 2S	D2	1.5	D2SBA60 D2SB60			
			2	D2SB60A			
25.2 × 25.0 × 4.2(mm)	– – JB	D5	6	D6JBB60V	D6JBB80V		
			8	D8JBB60V	D8JBB80V		
			10	D10JBB60V	D10JBB80V		
32.5 × 25.0 × 4.6(mm)	– – 3S	D3	4	D3SBA60 D3SB60 D4SB60L	D3SB80 D4SB80		
			10	D10XB60 D10XB60H	D10XB80		
29.4 × 29.0 × 4.6(mm)	– – JA	D6	15	D15JAB60V	D15JAB80V		
			25	D25JAB60V	D25JAB80V		
37.5 × 30.0 × 4.6(mm)	– – 5S	D4	6	D5SBA60 D5SB60 D6SB60L	D5SB80 D6SB80		
			15	D15XB60 D15XB60H	D15XB80	D15XB100	
			20	D20XB60	D20XB80		
			25	D25XB60	D25XB80	D25XB100	
			35		N D35XB80		
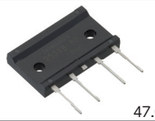 47.0 × 45.7 × 7.5(mm)	– – TSB(4pin)	D7	50		D50XB80		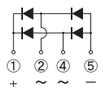
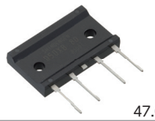 47.0 × 45.7 × 7.5(mm)	– – JC(4pin)		50		D50JCB80V		

N : New product

DIP (Dual In-line Package) Bridge Diode

Package	JEDEC Code JEITA Code House Name	Fig.	$I_{F(AV)}$ [A]	V_{RRM} [V] 600	800	1000	Remarks
47.0 × 45.7 × 7.5(mm)	– – JH	D10-1	70		D70JHB80V		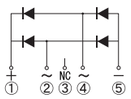

SIP (Single In-line Package) Bridge Diodes

THD (Through Hole Device)

Package: JEDEC Code / JEITA Code / House Name	Fig.	Type No.	Absolute Maximum Ratings: V_{RRM} [V]	I_F (AV) [A]	Conditions Tc [℃]	I_{FSM} [A]	T_j [℃]	Electrical Characteristics: V_F (max) [V]	Conditions I_F [A]	I_R (max) $V_R=V_{RM}$ [μA]	Halogen free	UL	Automotive
– – D3K	D1	UD2KB80	800	2	143	62	150	1.05	1	10	–	UL	–
		UD3KB80	800	3	140	90	150	1.05	1.5	10	–	UL	–
		UD4KB80	800	4	138	135	150	1.00	2	10	–	UL	–
		UD6KBA80	800	6	131	135	150	1.05	3	10	–	UL	–
		UD8KBA80	800	8	126	165	150	1.05	4	10	–	UL	–
– – 2S	D2	D2SBA60	600	1.5	25 *1	60	150	1.05	0.75	10	–	–	–
		D2SB60	600	1.5	25 *1	80	150	1.05	0.75	10	–	–	–
		D2SB60A	600	2	115 *2	120	150	0.95	1	10	–	–	–
– – JB	D5	D6JBB60V	600	6	131	100	150	1.05	3	10	–	UL	–
		D6JBB80V	800	6	131	100	150	1.05	3	10	–	UL	–
		D8JBB60V	600	8	130	130	150	1.05	4	10	–	UL	–
		D8JBB80V	800	8	130	130	150	1.05	4	10	–	UL	–
		D10JBB60V	600	10	129	150	150	1.05	5	10	–	UL	–
		D10JBB80V	800	10	129	150	150	1.05	5	10	–	UL	–
– – 3S	D3	D3SBA60	600	4	108	80	150	1.05	2	10	–	UL	–
		D3SB60	600	4	108	120	150	1.05	2	10	–	UL	–
		D4SB60L	600	4	111	150	150	0.95	2	10	–	UL	–
		D3SB80	800	4	108	120	150	1.05	2	10	–	UL	–
		D4SB80	800	4	108	150	150	0.95	2	10	–	UL	–
		D10XB60	600	10	100	120	150	1.10	5	10	–	UL	–
		D10XB60H	600	10	112	170	150	1.05	5	10	–	UL	–
		D10XB80	800	10	100	120	150	1.10	5	10	–	UL	–
– – JA	D6	D15JAB60V	600	15	110	200	150	1.05	7.5	10	–	UL	–
		D15JAB80V	800	15	110	200	150	1.05	7.5	10	–	UL	–
		D25JAB60V	600	25	107	350	150	1.05	12.5	10	–	UL	–
		D25JAB80V	800	25	107	350	150	1.05	12.5	10	–	UL	–
– – 5S	D4	D5SBA60	600	6	111	120	150	1.05	3	10	–	UL	–
		D5SB60	600	6	110	170	150	1.05	3	10	–	UL	–
		D6SB60L	600	6	112	170	150	1.05	3	10	–	UL	–
		D5SB80	800	6	110	170	150	1.05	3	10	–	UL	–
		D6SB80	800	6	110	170	150	1.05	3	10	–	UL	–
		D15XB60	600	15	100	200	150	1.10	7.5	10	–	UL	–
		D15XB60H	600	15	107	240	150	1.05	7.5	10	–	UL	–
		D15XB80	800	15	100	200	150	1.10	7.5	10	–	UL	–
		D15XB100	1000	15	110	200	150	1.10	7.5	10	–	UL	–
		D20XB60	600	20	87	240	150	1.10	10	10	–	UL	–
		D20XB80	800	20	87	240	150	1.10	10	10	–	UL	–
		D25XB60	600	25	98	350	150	1.05	12.5	10	–	UL	■
		D25XB80	800	25	98	350	150	1.05	12.5	10	–	UL	■
		D25XB100	1000	25	106	350	150	1.05	12.5	10	–	UL	–
		N D35XB80	800	35	93	603 *3	-55 to 150	1.05	17.5	10	–	UL	–
– – TSB(4pin)	D7	D50XB80	800	50	95	600	150	1.05	25	10	–	UL	–
– – JC(4pin)		D50JCB80V	800	50	94	600	150	1.05	25	10	–	UL	■

N : New product *1 : Ta *2 : Tl *3 : 60Hz ■ : Please contact us. UL : UL recognized (UL File No. E142422)

DIP (Dual In-line Package) Bridge Diode

Package: JEDEC Code / JEITA Code / House Name	Fig.	Type No.	Absolute Maximum Ratings: V_{RRM} [V]	I_F (AV) [A]	Conditions Tc [℃]	I_{FSM} [A]	T_j [℃]	Electrical Characteristics: V_F (max) [V]	Conditions I_F [A]	I_R (max) $V_R=V_{RM}$ [μA]	Halogen free	UL	Automotive
– – JH	D10-1	D70JHB80V	800	70	99	500	-55 to 150	1.1	35	10	–	–	–

BRIDGE DIODES

BRIDGE DIODES

SQIP (Square In-line Package) Bridge Diodes

Package	JEDEC Code JEITA Code House Name	Fig.	$I_{F(AV)}$ [A]	V_{RRM} [V] 600	800	1000	Remarks
13.0 × 13.0 × 27.5(mm)	– – S2VB	E3	2	S2VB60			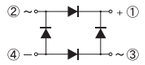
17.0 × 17.0 × 32.5(mm)	– – S4VB	E4	4	S4VB60			
25.0 × 25.0 × 32.5(mm)	– – S5VB	E5	6	S5VB60			
22.0 × 22.0 × 32.5(mm)	– – S10VB	E6	10	S10VB60			
26.5 × 26.5 × 25.0(mm)	– – S15VB	E7	15	S15VB60			
32.0 × 32.0 × 25.0(mm)	– – S25VB	E8	25	S25VB60	S25VB80		
36.0 × 36.0 × 24.0(mm)	– – S50VB	E9	50	S50VB60	S50VB80		

Input/Output In-line Terminal Type

Package	JEDEC Code JEITA Code House Name	Fig.	$I_{F(AV)}$ [A]	V_{RRM} [V] 600	800	1000	Remarks
17.0 × 17.0 × 31.0(mm)	– – S3WB	E10	2.3	S3WB60			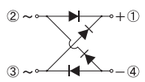
22.5 × 22.5 × 32.5(mm)	– – S10WB	E11	10	S10WB60			
26.5 × 26.5 × 32.5(mm)	– – S15WB	E12	15	S15WB60			
32.5 × 32.5 × 32.5(mm)	– – S20WB	E13	20	S20WB60	S20WB80		

3 Phase Bridge Diodes

THD (Through Hole Device)

Package	JEDEC Code JEITA Code House Name	Fig.	$I_{F(AV)}$ [A]	V_{RRM} [V] 800	1200	1600	Remarks
47.0 × 45.7 × 7.5(mm)	– – TSB(5pin)	D8	30	D30XT80			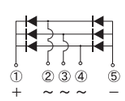
			45	D45XT80		D45XT160	
47.0 × 45.7 × 7.5(mm)	– – JC(5pin)		30		D30JCT120V		
			45		D45JCT120V	D45JCT160V	
47.0 × 45.7 × 7.5(mm)	– – JF	D9	75	D75JFT80V			
47.0 × 45.7 × 7.5(mm)	– – JH	D10-2	100	D100JHT80V	D100JHT120V	N D100JHT160V	

N : New product

SQIP (Square In-line Package) Bridge Diodes

Package JEDEC Code JEITA Code House Name	Fig.	Type No.	Absolute Maximum Ratings V_{RRM} [V]	I_F (AV) [A]	Conditions Tc [℃]	I_{FSM} [A]	T_j [℃]	Electrical Characteristics V_F (max) [V]	Conditions I_F [A]	I_R (max) $V_R=V_{RM}$ [μA]	Halogen free	UL	Automotive
– – S2VB	E3	S2VB60	600	2 *1	40	40	150	1.05	1	10	–	–	–
– – S4VB	E4	S4VB60	600	4	40	80	150	1.05	2	10	–	–	–
– – S5VB	E5	S5VB60	600	6	40	200	150	1.05	3	10	–	–	–
– – S10VB	E6	S10VB60	600	10	40	200	150	1.05	5	10	–	–	–
– – S15VB	E7	S15VB60	600	15	83 *2	200	150	1.05	7.5	10	–	–	–
– – S25VB	E8	S25VB60	600	25	85 *2	400	150	1.05	12.5	10	–	–	–
		S25VB80	800	25	85 *2	400	150	1.05	12.5	10	–	–	–
– – S50VB	E9	S50VB60	600	50	95 *2	500	150	1.05	25	10	–	–	–
		S50VB80	800	50	95 *2	500	150	1.05	25	10	–	UL	–

*1 : Without heatsink *2 : Tc UL : UL recognized (UL File No. E142422)

Input/Output In-line Terminal Type

Package JEDEC Code JEITA Code House Name	Fig.	Type No.	Absolute Maximum Ratings V_{RRM} [V]	I_F (AV) [A]	Conditions Tc [℃]	I_{FSM} [A]	T_j [℃]	Electrical Characteristics V_F (max) [V]	Conditions I_F [A]	I_R (max) $V_R=V_{RM}$ [μA]	Halogen free	UL	Automotive
– – S3WB	E10	S3WB60	600	2.3	40 *	120	150	1.05	2	10	–	–	–
– – S10WB	E11	S10WB60	600	10	74	170	150	1.05	5	10	–	–	–
– – S15WB	E12	S15WB60	600	15	77	200	150	1.05	7.5	10	–	–	–
– – S20WB	E13	S20WB60	600	20	76	500	150	1.05	10	10	–	–	–
		S20WB80	800	20	76	500	150	1.05	10	10	–	UL	–

* : Ta UL : UL recognized (UL File No. E142422)

3 Phase Bridge Diodes

THD (Through Hole Device)

Package JEDEC Code JEITA Code House Name	Fig.	Type No.	Absolute Maximum Ratings V_{RRM} [V]	I_F (AV) [A]	Conditions Tc [℃]	I_{FSM} [A]	T_j [℃]	Electrical Characteristics V_F (max) [V]	Conditions I_F [A]	I_R (max) $V_R=V_{RM}$ [μA]	Halogen free	UL	Automotive
– – TSB(5pin)	D8	D30XT80	800	30	117	300	150	1.05	10	10	–	UL	–
		D45XT80	800	45	101	400	150	1.05	15	10	–	UL	–
		D45XT160	1600	45	97	360 *	150	1.05	15	100	–	UL	–
– – JC(5pin)		D30JCT120V	1200	30	116	300	150	1.05	10	10	–	UL	–
		D45JCT120V	1200	45	99	450	150	1.05	15	10	–	UL	–
		D45JCT160V	1600	45	97	450	150	1.05	15	10	–	UL	–
– – JF	D9	D75JFT80V	800	75	109	400	150	1.05	25	10	–	–	–
– – JH	D10-2	D100JHT80V	800	100	99	500	-55 to 150	1.10	35	10	–	UL	–
		D100JHT120V	1200	100	92	450	-55 to 150	1.17	35	10	–	UL	–
		N D100JHT160V	1600	100	92	540	-55 to 150	1.15	35	10	–	UL	–

N : New product * : 60Hz UL : UL recognized (UL File No. E142422)

BRIDGE DIODES

Series	Feature
S	Evenly balanced V_F and I_R
N	Low V_F, High Voltage
K	Low V_F

3 Phase Bridge Diodes

Package	JEDEC Code JEITA Code House Name	Fig.	$I_{F(AV)}$ [A]	V_{RRM} [V] 600	800	1600	Remarks
36.0 × 36.0 × 24.0(mm)	– – SVT	E15	10	S10VT60	S10VT80		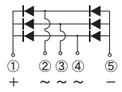
			15	S15VT60	S15VT80		
			20	S20VT60	S20VT80		
			30	S30VT60	S30VT80	S30VT160	
36.0 × 36.0 × 23.0(mm)	– – SVTA	E14	10	S10VTA60	S10VTA80		
			15	S15VTA60	S15VTA80		
			20	S20VTA60	S20VTA80		
			30	S30VTA60	S30VTA80	S30VTA160	
89.0 × 50.0 × 16.6(mm)	– – MG038	F7	150		N MG038B150080A	★MG038D150160A	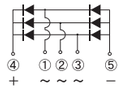
			200		N MG038A200080A	★MG038C200160A	
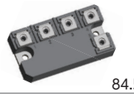 84.5 × 46.0 × 17.0(mm)	– – MG060	F9	100		★MG060C100080A		
91.0 × 52.0 × 17.0(mm)	– – MG061	F10	150		★MG061A150080A		
			200		★MG061B200080A		

N : New product ★ : Under development

High Speed Bridge Diodes (SBD)

THD (Through Hole Device)

Package	JEDEC Code JEITA Code House Name	Fig.	$I_{F(AV)}$ [A]	V_{RRM} [V] 40	60	200	Remarks
32.5 × 25.0 × 4.6(mm)	– – 3S	D3	4	D4SBS4	D4SBS6	D4SBN20	
			10	D10SBS4			
			15		D15XBS6		
37.5 × 30.0 × 4.6(mm)	– – 5S	D4	6			D6SBN20	
			15			D15XBN20	
			20		D20XBS6		
			30			D30XBN20	

High Speed Bridge Diodes (FRD)

THD (Through Hole Device)

Package	JEDEC Code JEITA Code House Name	Fig.	$I_{F(AV)}$ [A]	V_{RRM} [V] 200	400	1000	Remarks
32.5 × 25.0 × 4.6(mm)	– – 3S	D3	4	D4SBL20U			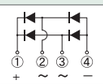
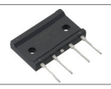 47.0 × 45.7 × 7.5(mm)	– – JC(4pin)	D7	30			D30JCB100K	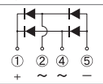

3 Phase Bridge Diodes

Package: JEDEC Code / JEITA Code / House Name	Fig.	Type No.	Absolute Maximum Ratings: V_{RRM} [V]	$I_{F(AV)}$ [A]	Conditions Tc [℃]	I_{FSM} [A]	T_j [℃]	Electrical Characteristics: V_F (max) [V]	Conditions I_F [A]	I_R (max) $V_R=V_{RRM}$ [μA]	Halogen free	UL	Automotive
– – SVT	E15	S10VT60	600	10	137	170	150	1.05	3.5	10	–	–	–
		S10VT80	800	10	137	150	150	1.05	3.5	10	–	–	–
		S15VT60	600	15	132	200	150	1.05	5	10	–	–	–
		S15VT80	800	15	132	200	150	1.05	5	10	–	–	–
		S20VT60	600	20	128	300	150	1.05	7	10	–	–	–
		S20VT80	800	20	128	300	150	1.05	7	10	–	–	–
		S30VT60	600	30	121	400	150	1.05	10	10	–	–	–
		S30VT80	800	30	121	400	150	1.05	10	10	–	UL	–
		S30VT160	1600	30	116	350	150	1.05	10	100	–	–	–
– – SVTA	E14	S10VTA60	600	10	137	170	150	1.05	3.5	10	–	–	–
		S10VTA80	800	10	137	150	150	1.05	3.5	10	–	–	–
		S15VTA60	600	15	132	200	150	1.05	5	10	–	–	–
		S15VTA80	800	15	132	200	150	1.05	5	10	–	–	–
		S20VTA60	600	20	128	300	150	1.05	7	10	–	–	–
		S20VTA80	800	20	128	300	150	1.05	7	10	–	–	–
		S30VTA60	600	30	121	400	150	1.05	10	10	–	–	–
		S30VTA80	800	30	121	400	150	1.05	10	10	–	–	–
		S30VTA160	1600	30	116	350	150	1.05	10	100	–	–	–
– – MG038	F7	N MG038B150080A	800	150	125	2350	150	1.05	50	10	○	UL	–
		★ MG038D150160A	1600	150	125	2350	150	1.05	50	10	○	UL	–
		N MG038A200080A	800	200	125	2750	150	1.05	67	10	○	UL	–
		★ MG038C200160A	1600	200	125	2750	150	1.05	67	10	○	UL	–
– – MG060	F9	★ MG060C100080A	800	100	125	1700	150	1.05	34	10	○	to be certified	–
– – MG061	F10	★ MG061A150080A	800	150	125	2350	150	1.05	50	10	○	to be certified	–
		★ MG061B200080A	800	200	124	2750	150	1.05	67	10	○	to be certified	–

N : New product ★ : Under development UL : UL recognized (UL File No. E142422)

High Speed Bridge Diodes (SBD)

THD (Through Hole Device)

Package: JEDEC Code / JEITA Code / House Name	Fig.	Type No.	Absolute Maximum Ratings: V_{RRM} [V]	$I_{F(AV)}$ [A]	Conditions Tc [℃]	I_{FSM} [A]	T_j [℃]	Electrical Characteristics: V_F (max) [V]	Conditions I_F [A]	I_R (max) $V_R=V_{RRM}$ [μA]	Halogen free	UL	Automotive	Remarks
– – 3S	D3	D4SBS4	40	4	116	60	150	0.55	2	2mA	–	–	–	S series
		D4SBS6	60	4	114	60	150	0.62	2	2mA	–	–	–	S series
		D4SBN20	200	4	103	60	150	0.90	2	1.5	–	–	–	N series
		D10SBS4	40	10	67	100	150	0.55	5	3.5mA	–	–	–	S series
		D15XBS6	60	15	59	150	150	0.63	7.5	6.0mA	–	–	–	S series
– – 5S	D4	D6SBN20	200	6	110	120	150	0.90	3	2	–	–	–	N series
		D15XBN20	200	15	106	200	150	0.90	7.5	5	–	–	–	N series
		D20XBS6	60	20	100	200	150	0.63	10	8.0mA	–	–	–	S series
		D30XBN20	200	30	91	350	150	0.90	15	10	–	–	–	N series

High Speed Bridge Diodes (FRD)

THD (Through Hole Device)

Package: JEDEC Code / JEITA Code / House Name	Fig.	Type No.	Absolute Maximum Ratings: V_{RRM} [V]	$I_{F(AV)}$ [A]	Conditions Tc [℃]	I_{FSM} [A]	T_j [℃]	Electrical Characteristics: V_F (max) [V]	Conditions I_F [A]	I_R (max) $V_R=V_{RRM}$ [μA]	Halogen free	UL	Automotive	Remarks
– – 3S	D3	D4SBL20U	200	4	108	80	150	0.98	2	10	–	–	–	
– – JC(4pin)	D7	D30JCB100K	1000	30	90	450	150	1.90	15	10	–	UL	○	K series

UL : UL recognized (UL File No. E142422)

BRIDGE DIODES

Low VF Bridge Diodes

THD (Through Hole Device)

Package	JEDEC Code JEITA Code House Name	Fig.	IF(AV) [A]	VRRM [V] 600	800	1000	Remarks
37.5 × 30.0 × 4.6(mm)	– – 5S	D4	15	LL15XB60			
			25	LL25XB60 ★LK25XB60			

★ : Under development

Low Noise Bridge Diodes

Surface Mount

Package	JEDEC Code JEITA Code House Name	Fig.	IF(AV) [A]	VRRM [V] 600	800	1000	Remarks
10.6 × 10.2 × 3.1(mm)	– – 1W	C8	1.1	LN1WBA60			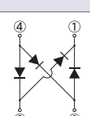

THD (Through Hole Device)

Package	JEDEC Code JEITA Code House Name	Fig.	IF(AV) [A]	VRRM [V] 600	800	1000	Remarks
6.2 × 10.2 × 3.0(mm)	– – 1W	C9	1.1	LN1WBA60			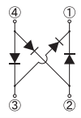
32.5 × 25.0 × 4.6(mm)	– – 3S	D3	4	LN4SB60			
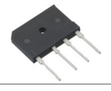 37.5 × 30.0 × 4.6(mm)	– – 5S	D4	6	LN6SB60			
			15	LN15XB60 LN15XB60H			
			25	LN25XB60			

Low VF Bridge Diodes

THD (Through Hole Device)

Package JEDEC Code JEITA Code House Name	Fig.	Type No.	Absolute Maximum Ratings VRRM [V]	IF(AV) [A]	Conditions Tc [℃]	IFSM [A]	Tj [℃]	Electrical Characteristics VF (max) [V]	Conditions IF [A]	IR (max) VR=VRM [μA]	trr (max) [μs]	Halogen free	UL	Automotive
– – 5S	D4	LL15XB60	600	15	124	200	150	0.90	7.5	10	3	–	UL	–
		LL25XB60	600	25	113	300	150	0.92	12.5	10	3	–	UL	■
		★LK25XB60	600	25	114	603 *	-55 to 150	0.95	12.5	10	5	–	UL	–

★ : Under development * : 60Hz ■ : Please contact us. UL : UL recognized (UL File No. E142422)

Low Noise Bridge Diodes

Surface Mount·THD (Through Hole Device)

Package JEDEC Code JEITA Code House Name	Fig.	Type No.	Absolute Maximum Ratings VRRM [V]	IF(AV) [A]	Conditions Tc [℃]	IFSM [A]	Tj [℃]	Electrical Characteristics VF (max) [V]	Conditions IF [A]	IR (max) VR=VRM [μA]	trr (max) [μs]	UL	Halogen free	Automotive	Remarks
– – 1W	C8(SMD) C9(DIP)	LN1WBA60	600	1.1	25 *	50	150	1.00	0.55	10	5	–	–	–	SMD-7072 DIP-7101
– – 3S	D3	LN4SB60	600	4	111	150	150	0.95	2	10	5	UL	–	–	
– – 5S	D4	LN6SB60	600	6	111	170	150	1.05	3	10	5	UL	–	–	
		LN15XB60	600	15	100	200	150	1.10	7.5	10	5	–	–	–	
		LN15XB60H	600	15	106	290	150	1.05	7.5	10	5	–	–	–	
		LN25XB60	600	25	85	350	150	1.05	12.5	10	5	–	–	–	

* : Ta UL : UL recognized (UL File No. E142422)

SCHOTTKY BARRIER DIODES

Schottky Barrier Diodes are diodes using a barrier at the junction of a metal and the semiconductor.
These are very suitable rectification devices featuring high speed and a low V_F diode.

Series	Feature
S	Evenly balanced V_F and I_R
M	Evenly balanced Low V_F and I_R
N	High Voltage
H	Ultra Low V_F, Tj=125℃ guaranteed
J	Low I_R
SL	Ultra Low I_R, Tj=175℃ guaranteed
Y	Evenly balanced V_F and Low I_R

Single

Surface Mount

Package	JEDEC Code JEITA Code House Name	Fig.	$I_{F(AV)}$ [A]	V_{RRM}[V] 30	40	45	60	80	100	150	200	Remarks
3.5 × 1.6 × 0.8(mm)	DO-219AB similar SC-109 G1F	B1-1	1	DG1M3 DG1H3	DG1S4		DG1S6		DG1J10A			
			1.4							DG1N15A		
			1.5	DG1M3A DG1H3A			DG1S6A					
3.9 × 1.8 × 1.4(mm)	DO-219AA similar – M1F	B2	1.2				M1FS6					
			1.33		M1FS4							
			1.5		M1FJ4							
			1.7	M1FH3								
			3	M1FM3								
5.0 × 2.5 × 2.0(mm)	DO-214AC – 1F	B3-1	1						D1FJ10			
			1.1		D1FS4		D1FS6					
			1.5		D1FS4A							
			2		D1FT4 D1FJ4		D1FT6	D1FJ8	D1FT10			
			2.5				D1FS6A					
			3	D1FH3	D1FT4A		D1FT6A	D1FJ8A	D1FT10A	D1FT15A		
			5	D1FM3								
4.7 × 2.4 × 0.98(mm)	– SC-110B CE	B5-1	3		D3CE4S		D3CE6S			D3CE15ST		
			5		D5CE4S							
5.1 × 3.75 × 2.0(mm)	DO-214AA similar – M2F	B6	6	M2FH3 M2FM3								
7.6 × 4.0 × 2.8(mm)	– – 2F	B9-1	1.5				D2FS6					
			1.6		D2FS4							
			2.6		D3FS4A							
			3				D3FS6		D3FJ10			
9.5 × 6.6 × 2.65(mm)	– SC-63 E-pack	G1-2	3		DE3S4M		DE3S6M					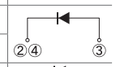
			5		DE5S4M		DE5S6M					
		G1-4	10	DE10S3L								
6.5 × 4.5 × 1.1(mm)	TO-277A similar – FY	G4	5			D5FY4R5ST D5FY4R5SY	D5FY6ST D5FY6SY		D5FY10ST D5FY10SY	D5FY15ST	N D5FY20SN	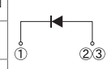
			10			D10FY4R5ST D10FY4R5SY	D10FY6ST D10FY6SY		D10FY10ST D10FY10SY	D10FY15ST		
			15			D15FY4R5ST D15FY4R5SY	D15FY6ST D15FY6SY		D15FY10ST D15FY10SY	D15FY15ST		
9.6 × 6.6 × 2.3(mm)	TO-252AA similar – FR	G5	15		D15FR4ST							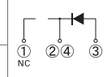
			20		D20FR4ST	N D20FR4R5S						

N : New product

Single

Surface Mount

Package: JEDEC Code / JEITA Code / House Name	Fig.	Type No.	Absolute Maximum Ratings: V_{RRM} [V]	I_F (AV) [A]	Conditions Tc [℃]	I_{FSM} [A]	Tj [℃]	Electrical Characteristics: V_F (max) [V]	Conditions I_F [A]	I_R (max) V_R=V_{RM} [mA]	Ct (typ) [pF]	Halogen free	Based on AEC-Q101	Automotive	Series
DO-219AB similar SC-109 G1F	B1-1	DG1M3	30	1	27 *1	20	150	0.46	0.7	0.05	36	–	○	○	M series
		DG1H3	30	1	113 *2	20	125	0.36	0.7	1	37	–	–	○	H series
		DG1S4	40	1	36 *1	30	150	0.55	0.7	0.8	37	–	○	○	S series
		DG1S6	60	1	128 *2	30	150	0.58	0.7	1	32	–	○	○	S series
		DG1J10A	100	1	125 *2	30	150	0.82	1	0.1	43	–	–	○	J series
		DG1N15A	150	1.4	65 *1	30	150	0.88	1.4	0.05	32	–	○	○	N series
		DG1M3A	30	1.5	37 *1	30	150	0.46	1.5	0.05	70	–	○	○	M series
		DG1H3A	30	1.5	107 *2	30	125	0.36	1.5	1	70	–	–	○	H series
		DG1S6A	60	1.5	122 *2	40	150	0.53	1	0.05	43	–	○	○	S series
DO-219AA similar – M1F	B2	M1FS6	60	1.2	25 *1	40	150	0.58	1.1	1	53	–	○	○	S series
		M1FS4	40	1.33	25 *1	30	150	0.55	1.1	0.8	50	–	○	○	S series
		M1FJ4	40	1.5	31 *1	30	150	0.63	1.5	0.05	65	–	○	○	J series
		M1FH3	30	1.7	25 *1	30	-55 to 125	0.36	1.5	1	80	–	–	–	H series
		M1FM3	30	3	100	30	150	0.46	1.5	0.05	80	–	○	○	M series
DO-214AC – 1F	B3-1	D1FJ10	100	1	52 *1	50	150	0.72	1	0.2	63	–	○	○	J series
		D1FS4	40	1.1	51 *1	30	150	0.55	1.1	1	65	–	○	○	S series
		D1FS6	60	1.1	38 *1	40	150	0.58	1.1	1	50	–	○	○	S series
		D1FS4A	40	1.5	28 *1	60	150	0.48	1.5	2	95	–	○	○	S series
		D1FT4	40	2	143 *2	60	175	0.74	2	5μA	63	–	○	○	SL series
		D1FJ4	40	2	117 *2	50	150	0.61	2	0.2	96	–	○	○	J series
		D1FT6	60	2	141 *2	60	175	0.78	2	5μA	53	–	○	○	SL series
		D1FJ8	80	2	110	30	150	0.74	1.5	0.2	40	–	–	○	Y series
		D1FT10	100	2	136 *2	50	175	0.86	2	5μA	40	–	○	○	SL series
		D1FS6A	60	2.5	103 *2	60	150	0.57	2.5	0.2	80	–	○	○	S series
		D1FH3	30	3	95	60	125	0.36	3	2	130	–	–	■	H series
		D1FT4A	40	3	127 *2	90	175	0.74	3	8μA	93	–	○	○	SL series
		D1FT6A	60	3	125 *2	90	175	0.78	3	8μA	78	–	○	○	SL series
		D1FJ8A	80	3	100	30	150	0.74	3	0.4	70	–	–	○	Y series
		D1FT10A	100	3	116 *2	60	175	0.86	3	8μA	60	–	○	○	SL series
		D1FT15A	150	3	116 *2	60	175	0.88	3	8μA	52	–	○	○	SL series
		D1FM3	30	5	83	90	150	0.46	3	0.1	130	–	○	○	M series
– SC-110B CE	B5-1	D3CE4S	40	3	106 *2	80	150	0.52	3	0.3	97	–	○	○	S series
		D3CE6S	60	3	112 *2	100	150	0.58	3	0.3	110	–	○	○	S series
		D3CE15ST	150	3	136 *2	80	175	0.88	3	8μA	52	–	○	○	SL series
		D5CE4S	40	5	94 *2	120	-55 to 150	0.52	5	0.5	157	–	–	○	S series
DO-214AA similar – M2F	B6	M2FH3	30	6	70	110	125	0.36	6	4	240	–	–	–	H series
		M2FM3	30	6	99	120	150	0.46	6	0.2	240	–	○	○	M series
– – 2F	B9-1	D2FS6	60	1.5	31 *1	60	150	0.58	2	2	120	–	–	○	S series
		D2FS4	40	1.6	34 *1	60	150	0.55	1.6	2.5	150	–	–	○	S series
		D3FS4A	40	2.6	34 *1	150	150	0.45	2.6	5	340	–	○	○	S series
		D3FS6	60	3	87 *2	80	150	0.58	3	2.5	130	–	–	○	S series
		D3FJ10	100	3	92 *2	100	150	0.74	3	0.4	143	–	–	○	J series
– SC-63 E-pack	G1-2	DE3S4M	40	3	121	70	150	0.55	3	2.5	150	–	–	–	S series
		DE3S6M	60	3	117	80	150	0.58	3	2.5	130	–	–	–	S series
		DE5S4M	40	5	101	80	150	0.55	5	3.5	180	–	–	–	S series
		DE5S6M	60	5	96	90	150	0.58	5	4.5	200	–	–	–	S series
	G1-4	DE10S3L	30	10	124	250	150	0.45	8	10	640	–	–	–	S series
TO-277A similar – FY	G4	D5FY4R5ST	45	5	165 *2	240	-55 to 175	0.74	5	15μA	187	○	○	○	SL series
		D5FY4R5SY	45	5	138 *2	220	-55 to 150	0.59	5	0.2	155	○	○	○	Y series
		D5FY6ST	60	5	164 *2	210	-55 to 175	0.78	5	15μA	148	○	○	○	SL series
		D5FY6SY	60	5	138 *2	210	-55 to 150	0.67	5	0.2	170	○	○	○	Y series
		D5FY10ST	100	5	162 *2	210	-55 to 175	0.86	5	15μA	104	○	○	○	SL series
		D5FY10SY	100	5	132 *2	130	-55 to 150	0.8	5	0.2	141	○	○	○	Y series
		D5FY15ST	150	5	162 *2	210	-55 to 175	0.88	5	15μA	92	○	○	○	SL series
		N D5FY20SN	200	5	163 *2	210	-55 to 175	0.87	5	5μA	111	○	○	○	SL series
		D10FY4R5ST	45	10	155 *2	250	-55 to 175	0.74	10	30μA	330	○	○	○	SL series
		D10FY4R5SY	45	10	126 *2	290	-55 to 150	0.59	10	0.4	302	○	○	○	Y series
		D10FY6ST	60	10	154 *2	230	-55 to 175	0.78	10	30μA	263	○	○	○	SL series
		D10FY6SY	60	10	127 *2	250	-55 to 150	0.67	10	0.4	262	○	○	○	Y series
		D10FY10ST	100	10	152 *2	230	-55 to 175	0.86	10	30μA	185	○	○	○	SL series
		D10FY10SY	100	10	118 *2	260	-55 to 150	0.8	10	0.4	253	○	○	○	Y series
		D10FY15ST	150	10	149 *2	230	-55 to 175	0.88	10	30μA	159	○	○	○	SL series
		D15FY4R5ST	45	15	145 *2	270	-55 to 175	0.74	15	40μA	398	○	○	○	SL series
		D15FY4R5SY	45	15	116 *2	310	-55 to 150	0.59	15	0.5	410	○	○	○	Y series
		D15FY6ST	60	15	143 *2	250	-55 to 175	0.78	15	40μA	345	○	○	○	SL series
		D15FY6SY	60	15	117 *2	280	-55 to 150	0.67	15	0.5	345	○	○	○	Y series
		D15FY10ST	100	15	141 *2	250	-55 to 175	0.86	15	40μA	242	○	○	○	SL series
		D15FY10SY	100	15	114 *2	280	-55 to 150	0.83	15	0.5	297	○	○	○	Y series
		D15FY15ST	150	15	138 *2	230	-55 to 175	0.88	15	40μA	209	○	○	○	SL series
TO-252AA similar – FR	G5	D15FR4ST	40	15	152	250	-55 to 175	0.74	15	40μA	398	–	○	■	SL series
		D20FR4ST	40	20	149	400	-55 to 175	0.74	20	60μA	600	–	○	■	SL series
		N D20FR4R5S	45	20	118	300	-55 to 150	0.55	20	2.8	625	–	–	■	S series

N : New product *1 : Ta *2 : Tl ■ : Please contact us.

SCHOTTKY BARRIER DIODES

Single

Axial

Package	JEDEC Code JEITA Code House Name	Fig.	$I_{F(AV)}$ [A]	V_{RRM} [V] 40	V_{RRM} [V] 60	Remarks
3.0 × ϕ 2.6(mm)	– – AX057	A1	1	D1NS4	D1NS6	
5.0 × ϕ 4.0(mm)	– – AX078	A4-1	2	D2S4M	D2S6M	
7.0 × ϕ 4.4(mm)	– – AX14	A7	3	D3S4M	D3S6M	

Two Terminal Type

Package	JEDEC Code JEITA Code House Name	Fig.	$I_{F(AV)}$ [A]	V_{RRM} [V] 40	V_{RRM} [V] 60	V_{RRM} [V] 90	V_{RRM} [V] 150	Remarks
28.5 × 10.0 × 4.5(mm)	– SC-91 FTO-220G	J4	5	SG5S4M	SG5S6M	SG5S9M		

Three Terminal Type

Package	JEDEC Code JEITA Code House Name	Fig.	$I_{F(AV)}$ [A]	V_{RRM} [V] 40	V_{RRM} [V] 60	V_{RRM} [V] 90	V_{RRM} [V] 150	Remarks
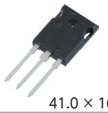 41.0 × 16.0 × 5.0(mm)	TO-247AD – MTO-3PV	K7-2	40				S40T15V	
			90				S90T15V	

Single

Axial

Package: JEDEC Code / JEITA Code / House Name	Fig.	Type No.	Absolute Maximum Ratings: V_{RRM} [V]	I_F (AV) [A]	Conditions Ta [℃]	I_{FSM} [A]	T_j [℃]	Electrical Characteristics: V_F (max) [V]	Conditions I_F [A]	I_R (max) $V_R=V_{RM}$ [mA]	Ct (typ) [pF]	Halogen free	Based on AEC-Q101	Automotive	Series
– – AX057	A1	D1NS4	40	1	59	30	150	0.55	1	0.8	50	–	–	–	S series
		D1NS6	60	1	46	30	150	0.58	1	1	53	–	–	–	S series
– – AX078	A4-1	D2S4M	40	2	122 *1	60	150	0.55	2	2	95	–	–	–	S series
		D2S6M	60	2	119 *1	60	150	0.58	2	2	90	–	–	–	S series
– – AX14	A7	D3S4M	40	3	63	80	150	0.55	3	3.5	150	–	–	–	S series
		D3S6M	60	3	133 *1	80	150	0.58	3	2.5	130	–	–	–	S series

*1 : Tl

Two Terminal Type

Package: JEDEC Code / JEITA Code / House Name	Fig.	Type No.	Absolute Maximum Ratings: V_{RRM} [V]	I_F (AV) [A]	Conditions Tc [℃]	I_{FSM} [A]	T_j [℃]	Electrical Characteristics: V_F (max) [V]	Conditions I_F [A]	I_R (max) $V_R=V_{RM}$ [mA]	Ct (typ) [pF]	Halogen free	Based on AEC-Q101	Automotive	Series
– SC-91 FTO-220G	J4	SG5S4M	40	5	131	150	150	0.52	5	0.5	157	–	–	–	S series
		SG5S6M	60	5	130	120	150	0.56	5	0.5	165	–	–	–	S series
		SG5S9M	90	5	124	90	150	0.75	5	0.5	140	–	–	–	S series

Three Terminal Type

Package: JEDEC Code / JEITA Code / House Name	Fig.	Type No.	Absolute Maximum Ratings: V_{RRM} [V]	I_F (AV) [A]	Conditions Tc [℃]	I_{FSM} [A]	T_j [℃]	Electrical Characteristics: V_F (max) [V]	Conditions I_F [A]	I_R (max) $V_R=V_{RM}$ [mA]	Ct (typ) [pF]	Halogen free	Based on AEC-Q101	Automotive	Series
TO-247AD – MTO-3PV	K7-2	S40T15V	150	40	131	700	150	0.92	40	0.12	595	–	–	○	N series
		S90T15V	150	90	122	1400	150	0.95	90	0.35	1690	–	–	○	N series

SCHOTTKY BARRIER DIODES

Center Tap,Common Cathode

Surface Mount

Package	JEDEC Code JEITA Code House Name	Fig.	I_F (AV) [A]	V_{RRM}[V] 30	40	60	90	100	120	150	Remarks
9.5 × 6.6 × 2.65(mm)	– SC-63 E-pack	G1-1	5	DE5SC3ML	DE5SC4M	DE5SC6M					
			10	DE10SC3L	DE10SC4						
9.5 × 6.6 × 2.65(mm)	TO-252AB similar SC-63 FE	G3-1	6		D6FEC4ST			D6FEC10ST	D6FEC12ST	D6FEC15ST	
13.2 × 10.2 × 4.7(mm)	– SC-83 similar STO-220	H1-1	10		DF10SC4M	DF10SC6	DF10SC9			DF10NC15	
			15		DF15SC4M			DF15JC10		DF15NC15	
			20		DF20SC4M		DF20SC9M	DF20JC10		DF20NC15	
			25			DF25SC6M					
			30	DF30SC3ML	DF30JC4 DF30SC4M	DF30JC6		DF30JC10		DF30NC15	
			40	DF40SC3L	DF40SC4						
13.2 × 10.2 × 4.6(mm)	– SC-83 similar FD	H2-2	10					D10FDC10ST			
			20					D20FDC10ST		D20FDC15ST	
			30		D30FDC4S			D30FDC10ST		D30FDC15ST	
			40					D40FDC10ST		D40FDC15ST	

Center Tap,Common Cathode

Surface Mount

Package: JEDEC Code / JEITA Code / House Name	Fig.	Type No.	Absolute Maximum Ratings: V_{RRM} [V]	I_F (AV) [A]	Conditions Tc [℃]	I_{FSM} [A]	T_j [℃]	Electrical Characteristics: V_F (max) [V]	Conditions I_F [A]	I_R (max) $V_R=V_{RM}$ [mA]	Ct (typ) [pF]	Halogen free	Based on AEC-Q101	Automotive	Series
– SC-63 E-pack	G1-1	DE5SC3ML	30	5	110	90	150	0.45	2.5	3.5	190	–	–	■	S series
		DE5SC4M	40	5	101	80	150	0.55	2.5	3.5	150	–	–	■	S series
		DE5SC6M	60	5	92	80	150	0.58	2.5	2.5	130	–	–	■	S series
		DE10SC3L	30	10	124	100	150	0.45	4	5	290	–	–	■	S series
		DE10SC4	40	10	132	100	150	0.55	5	3.5	210	–	–	■	S series
TO-252AB similar SC-63 FE	G3-1	D6FEC4ST	40	6	158	90	175	0.74	3	8μA	93	–	○	○	SL series
		D6FEC10ST	100	6	154	100	175	0.86	3	8μA	60	–	○	○	SL series
		D6FEC12ST	120	6	154	100	175	0.87	3	8μA	60	–	○	○	SL series
		D6FEC15ST	150	6	154	100	175	0.88	3	8μA	52	–	○	○	SL series
– SC-83 similar STO-220	H1-1	DF10SC4M	40	10	125	100	150	0.55	5	3.5	180	–	–	–	S series
		DF10SC6	60	10	132	150	150	0.58	5	4.5	260	–	–	–	S series
		DF10SC9	90	10	131	150	150	0.75	5	3	185	–	–	–	S series
		DF10NC15	150	10	123	100	150	0.88	5	0.2	110	–	–	–	N series
		DF15SC4M	40	15	129	150	150	0.55	7.5	5	340	–	–	–	S series
		DF15JC10	100	15	126	150	150	0.86	7.5	0.6	200	–	–	–	J series
		DF15NC15	150	15	126	150	150	0.88	7.5	0.3	155	–	–	–	N series
		DF20SC4M	40	20	122	230	150	0.55	10	7.5	390	–	–	–	S series
		DF20SC9M	90	20	111	200	150	0.75	10	10	370	–	–	–	S series
		DF20JC10	100	20	121	200	150	0.86	10	0.7	260	–	–	–	J series
		DF20NC15	150	20	121	200	150	0.88	10	0.4	200	–	–	–	N series
		DF25SC6M	60	25	115	300	150	0.58	12.5	10	490	–	–	–	S series
		DF30SC3ML	30	30	119	350	150	0.48	15	10	820	–	–	–	S series
		DF30JC4	40	30	115	250	150	0.61	15	0.7	560	–	–	–	J series
		DF30SC4M	40	30	112	360	150	0.55	15	10	590	–	–	–	S series
		DF30JC6	60	30	108	250	150	0.69	15	0.7	490	–	–	–	J series
		DF30JC10	100	30	116	300	150	0.86	15	1	390	–	–	–	J series
		DF30NC15	150	30	115	300	150	0.88	15	0.5	300	–	–	–	N series
		DF40SC3L	30	40	112	400	150	0.45	15	17	1200	–	–	–	S series
		DF40SC4	40	40	106	350	150	0.55	20	14	860	–	–	–	S series
– SC-83 similar FD	H2-2	D10FDC10ST	100	10	158	150	175	0.86	5	15μA	104	–	○	○	SL series
		D20FDC10ST	100	20	119	250	150	0.86	10	30μA	185	–	○	○	N series
		D20FDC15ST	150	20	118	250	150	0.88	10	30μA	159	–	–	○	N series
		D30FDC4S	40	30	114	300	150	0.55	15	1.5	415	–	○	○	S series
		D30FDC10ST	100	30	108	300	150	0.86	15	40μA	242	–	–	○	N series
		D30FDC15ST	150	30	107	300	150	0.88	15	40μA	209	–	–	○	N series
		D40FDC10ST	100	40	105	400	150	0.86	20	60μA	360	–	–	○	N series
		D40FDC15ST	150	40	103	400	150	0.88	20	60μA	315	–	–	○	N series

■ : Please contact us.

SCHOTTKY BARRIER DIODES

Center Tap,Common Cathode

Three Terminal Type

Package	JEDEC Code JEITA Code House Name	Fig.	I_F (AV) [A]	V_{RRM}[V] 15	30	40	60	90	100	120	150	Remarks
28.5 × 10.0 × 4.5(mm)	– SC-91 FTO-220G	J9	8			SG8SC4M						
			10		SG10SC3LM	SG10SC4M	SG10SC6M	SG10SC9M			SG10TC15M	
			15			SG15SC4M	SG15SC6M					
			20		SG20SC3LM	SG20SC4M	SG20JC6M SG20SC6M	SG20SC9M	SG20TC10M	SG20TC12M	SG20TC15M	
			30		SG30SC3LM	SG30SC4M	SG30JC6M SG30SC6M		SG30TC10M	SG30TC12M	SG30TC15M	
			40						SG40TC10M	SG40TC12M		
41.0 × 16.0 × 5.0(mm)	TO-247AD – MTO-3PT	K5-2	20					S20SC9MT				
			30			S30SC4MT	S30SC6MT				S30TC15T	
			40	S40HC1R5T								
			60	S60HC1R5T	S60HC3T S60SC3LT	S60SC4MT	S60SC6MT					
41.0 × 16.0 × 5.0(mm)	TO-247AD – MTO-3PV	K7-1	60						S60JC10V			

Center Tap,Common Cathode

Three Terminal Type

Package: JEDEC Code / JEITA Code / House Name	Fig.	Type No.	Absolute Maximum Ratings: V_{RRM} [V]	I_F (AV) [A]	Conditions Tc [℃]	I_{FSM} [A]	T_j [℃]	Electrical Characteristics: V_F (max) [V]	Conditions I_F [A]	I_R (max) $V_R=V_{RM}$ [mA]	Ct (typ) [pF]	Halogen free	Based on AEC-Q101	Automotive	Series
– SC-91 FTO-220G	J9	SG8SC4M	40	8	155	80	175	0.56	4.0	0.3	100	–	–	–	S series
		SG10SC3LM	30	10	136	150	150	0.45	4.0	5	310	–	–	–	S series
		SG10SC4M	40	10	150	150	175	0.52	5.0	0.5	157	–	–	–	S series
		SG10SC6M	60	10	145	140	175	0.56	5.0	0.5	165	–	–	–	S series
		SG10SC9M	90	10	139	150	175	0.75	5.0	0.5	140	–	–	–	S series
		SG10TC15M	150	10	153	120	175	0.88	5.0	15μA	92	–	–	–	SL series
		SG15SC4M	40	15	117	150	150	0.52	7.5	0.8	230	–	–	–	S series
		SG15SC6M	60	15	113	180	150	0.61	7.5	0.6	185	–	–	–	S series
		SG20SC3LM	30	20	124	250	150	0.45	8.0	9	570	–	–	–	S series
		SG20SC4M	40	20	115	200	150	0.52	10.0	1.1	315	–	–	–	S series
		SG20JC6M	60	20	106	200	150	0.69	10.0	0.1	250	–	–	–	J series
		SG20SC6M	60	20	107	200	150	0.61	10.0	0.8	250	–	–	–	S series
		SG20SC9M	90	20	112	200	150	0.75	10.0	1	245	–	–	–	S series
		SG20TC10M	100	20	140	200	175	0.86	10.0	30μA	185	–	–	–	SL series
		SG20TC12M	120	20	137	200	175	0.87	10.0	30μA	175	–	–	–	SL series
		SG20TC15M	150	20	136	200	175	0.88	10.0	30μA	159	–	–	–	SL series
		SG30SC3LM	30	30	117	350	150	0.45	12.5	15	960	–	–	–	M series
		SG30SC4M	40	30	101	300	150	0.55	15.0	1.5	415	–	–	–	S series
		SG30JC6M	60	30	90	250	150	0.69	15.0	0.15	325	–	–	–	J series
		SG30SC6M	60	30	100	300	150	0.61	15.0	1.2	385	–	–	–	S series
		SG30TC10M	100	30	126	300	175	0.86	15.0	40μA	242	–	–	–	SL series
		SG30TC12M	120	30	122	300	175	0.87	15.0	40μA	228	–	–	–	SL series
		SG30TC15M	150	30	122	300	175	0.88	15.0	40μA	209	–	–	–	SL series
		SG40TC10M	100	40	116	350	175	0.86	20.0	60μA	362	–	–	–	SL series
		SG40TC12M	120	40	112	350	175	0.87	20.0	60μA	336	–	–	–	SL series
TO-247AD – MTO-3PT	K5-2	S20SC9MT	90	20	136	200	150	0.75	10.0	1	245	–	–	–	S series
		S30SC4MT	40	30	132	300	150	0.55	15.0	1.5	410	–	–	–	S series
		S30SC6MT	60	30	129	300	150	0.61	15.0	1.2	385	–	–	–	S series
		S30TC15T	150	30	128	300	150	0.88	15.0	40μA	209	–	–	–	N series
		S40HC1R5T	15	40	111	450	125	0.41	20.0	10	960	–	–	–	H series
		S60HC1R5T	15	60	110	600	125	0.41	30.0	15	1400	–	–	–	H series
		S60HC3T	30	60	112	650	125	0.40	30.0	20	1100	–	–	–	H series
		S60SC3LT	30	60	138	650	150	0.48	30.0	25	1600	–	–	–	S series
		S60SC4MT	40	60	127	500	150	0.55	30.0	3	790	–	–	–	S series
		S60SC6MT	60	60	121	470	150	0.67	30.0	2	640	–	–	–	S series
TO-247AD – MTO-3PV	K7-1	S60JC10V	100	60	118	500	150	0.95	30.0	0.2	695	–	–	○	J series

SCHOTTKY BARRIER DIODES

Array

Surface Mount

Package	JEDEC Code JEITA Code House Name	Fig.	$I_{F(AV)}$ [A]	V_{RRM} [V]		Remarks
				40	60	
7.0 × 4.7 × 2.6(mm)	TO-269AA – 1Z	C2-2	1.2	S1ZAS4		

Diode Module

Package	JEDEC Code JEITA Code House Name	Fig.	$I_{F(AV)}$ [A]	V_{RRM} [V]		Remarks
				40	60	
43.0 × 27.0 × 21.0(mm)	– – Module	F1	120	D120SC4M	D120SC6M	
			240	D240SC4M	D240SC6M	
43.0 × 27.0 × 21.0(mm)		F3-1	180	D180SC4M	D180SC6M	
			360	D360SC4M	D360SC6M	

Array

Surface Mount

Package		Type No.	Absolute Maximum Ratings					Electrical Characteristics				Halogen free	Based on AEC-Q101	Automotive	Series
JEDEC Code JEITA Code House Name	Fig.		V_{RRM} [V]	I_F (AV) [A]	Conditions Ta [℃]	I_{FSM} [A]	T_j [℃]	V_F (max) [V]	Conditions I_F [A]	I_R (max) $V_R=V_{RM}$ [mA]	Ct (typ) [pF]				
TO-269AA – 1Z	C2-2	S1ZAS4	40	1.2	47	40	150	0.55	1	1	65	–	–	–	S series

Diode Module

Package		Type No.	Absolute Maximum Ratings					Electrical Characteristics				Halogen free	Based on AEC-Q101	Automotive	Series
JEDEC Code JEITA Code House Name	Fig.		V_{RRM} [V]	I_F (AV) [A]	Conditions Tc [℃]	I_{FSM} [A]	T_j [℃]	V_F (max) [V]	Conditions I_F [A]	I_R (max) $V_R=V_{RM}$ [mA]	Ct (typ) [pF]				
– – Module	F1	D120SC4M	40	120	90	800	125	0.58	60	40	2.1	–	–	–	S series
		D120SC6M	60	120	85	800	125	0.67	60	40	2.2	–	–	–	S series
		D240SC4M	40	240	77	1600	125	0.6	120	80	4.2	–	–	–	S series
		D240SC6M	60	240	71	1600	125	0.67	120	80	4.4	–	–	–	S series
	F3-1	D180SC4M	40	180	83	800	125	0.58	60	40	2.1	–	–	–	S series
		D180SC6M	60	180	78	800	125	0.67	60	40	2.2	–	–	–	S series
		D360SC4M	40	360	64	1600	125	0.6	120	80	4.2	–	–	–	S series
		D360SC6M	60	360	58	1600	125	0.67	120	80	4.4	–	–	–	S series

FAST RECOVERY DIODES

Fast Recovery Diodes are high speed type PN junction rectifying devices.
These diodes for the switching of power supply are suitable for use in household appliances, OA apparatuses, and FA apparatuses.

Series	Feature
K	Low V_F
ML	Low V_F, Low trr, Soft Recovery
US	Ultra Fast, Soft Recovery
A	Ultra Fast, Low V_F

Single

Surface Mount

Package	JEDEC Code JEITA Code House Name	Fig.	$I_{F(AV)}$ [A]	V_{RRM}[V] 200	400	600	700	1000	1200	Remarks
3.9 × 1.8 × 1.4(mm)	DO-219AA similar – M1F	B2	1			M1FK60				
			1.1	M1FL20U						
			1.5		M1FL40U					
5.0 × 2.5 × 2.0(mm)	DO-214AC – 1F	B3-1	0.8			D1FK60	D1FK70			
			1					D1FK100	N D1FK120P D1FK120	
			1.1	D1FL20U						
			1.5		D1FL40U					
4.7 × 2.4 × 0.98(mm)	– SC-110B CE	B5-1	3	D3CE20LUS		D3CE60K				①→|◀←②
5.1 × 3.75 × 2.0(mm)	DO-214AA similar – M2F	B6	1.5	M2FL20U						
			3	M3FL20U						
7.6 × 4.0 × 2.8(mm)	– – 2F	B9-1	1.3		D2FL40					
			1.5	D2FL20U		D2FK60				
			2		N D2FL40U					
			2.1			D3FK60				
			2.2						N D3FK120	
9.5 × 6.6 × 2.65(mm)	– SC-63 E-pack	G1-5	3	DE3L20UA						①④ ② N.C. ③
			5			DE5L60U DE5L60A				
6.5 × 4.5 × 1.1(mm)	TO-277A similar – FY	G4	5			D5FY60K				① ②③
13.2 × 10.2 × 4.7(mm)	– SC-83 similar STO-220	H1-2	8			DF8L60US				①②④ ③
			10			DF10L60				
			20			DF20L60 DF20L60U				
9.6 × 6.6 × 2.3(mm)	TO-252AA similar – FR	G5	10			D10FR60LA				
			15			D15FR60LA				
13.2 × 10.2 × 4.6(mm)	– SC-83 similar FD	H2-1	8			D8FD60LUS				① NC ②④ ③
			20			D20FD60LU				
			30			D30FD60K				

N : New product

Axial

Package	JEDEC Code JEITA Code House Name	Fig.	$I_{F(AV)}$ [A]	V_{RRM}[V] 200	400	600	700	1000	Remarks
3.0 × φ 2.6(mm)	– – AX057	A1	0.8			D1NF60 D1NK60			
			1	D1NL20U	D1NL40U			D1NK100	
5.0 × φ 4.0(mm)	– – AX078	A4-1	1.5	D2L20U					
			2		D2L40U				
7.0 × φ 4.4(mm)	– – AX10	A5-1	1.5	S2L20U		S2L60			①→|◀←②
			2		S2L40U			S2K100	
7.0 × φ 4.4(mm)	– – AX14	A7	2.2			S3L60			
			3	S3L20U	S3L40U	S3K60			

Single

Surface Mount

Package: JEDEC Code / JEITA Code / House Name	Fig.	Type No.	Absolute Maximum Ratings: V_{RRM} [V]	I_F (AV) [A]	Conditions Tc [℃]	I_{FSM} [A]	T_j [℃]	Electrical Characteristics: V_F (max) [V]	Conditions I_F [A]	I_R (max) $V_R=V_{RM}$ [μA]	trr (max) [ns]	Halogen free	Based on AEC-Q101	Automotive	Series
DO-219AA similar – M1F	B2	M1FK60	600	1	116 *1	15	150	1.5	1	10	75	–	–	○	K series
		M1FL20U	200	1.1	25 *2	30	150	0.98	1.1	10	35	–	○	○	–
		M1FL40U	400	1.5	139	30	175	1.2	1	10	25	–	■	○	–
DO-214AC – 1F	B3-1	D1FK60	600	0.8	29 *2	20	150	1.3	0.8	10	75	–	○	○	K series
		D1FK70	700	0.8	32 *2	25	150	1.3	0.8	10	400	–	○	○	–
		D1FK100	1000	1	97 *1	20	150	2.1	1	10	75	–	○	○	K series
		N D1FK120P	1200	1	79 *1	18	-55 to 150	3.0	1	10	85	–	○	■	K series
		D1FK120	1200	1	75 *1	20	150	3.0	1	10	120	–	–	■	K series
		D1FL20U	200	1.1	25 *2	20	150	0.98	1.1	10	35	–	○	○	–
		D1FL40U	400	1.5	103 *1	30	150	1.2	1	10	25	–	○	○	–
– SC-110B CE	B5-1	D3CE20LUS	200	3	105 *1	60	-55 to 150	0.98	3	10	25	–	○	○	–
		D3CE60K	600	3	78 *1	50	150	1.45	3	10	80	–	○	○	K series
DO-214AA similar – M2F	B6	M2FL20U	200	1.5	31 *2	50	150	0.92	1.5	10	35	–	–	○	–
		M3FL20U	200	3	75 *1	75	150	0.95	3	10	35	–	○	○	–
– – 2F	B9-1	D2FL40	400	1.3	25 *2	40	150	1.3	1.3	10	50	–	–	–	–
		D2FL20U	200	1.5	25 *2	50	150	0.98	1.5	10	35	–	○	○	–
		D2FK60	600	1.5	101 *1	40	150	1.3	1.5	10	75	–	–	○	K series
		N D2FL40U	400	2	100 *1	95	-55 to 150	1.25	2	10	35	–	–	–	–
		D3FK60	600	2.1	93 *1	120	150	1.2	2.1	10	75	–	–	○	K series
		N D3FK120	1200	2.2	91 *1	160	-55 to 150	2.1	3	10	80	–	–	–	K series
– SC-63 E-pack	G1-5	DE3L20UA	200	3	137	60	150	0.98	3	10	35	–	–	■	–
		DE5L60U	600	5	91	60	150	3.0	5	25	25	–	–	■	–
		DE5L60A	600	5	119	60	150	2.0	5	10	50	–	–	■	–
TO-277A similar – FY	G4	D5FY60K	600	5	130 *1	200	-55 to 150	1.25	5	10	95	○	–	■	K series
– SC-83 similar STO-220	H1-2	DF8L60US	600	8	66	60	150	3.6	8	50	25	–	–	–	US series
		DF10L60	600	10	105	100	150	1.9	10	10	50	–	–	–	–
		DF20L60	600	20	84	170	150	1.9	20	25	70	–	–	–	–
		DF20L60U	600	20	93	160	150	3.0	20	25	35	–	–	–	–
TO-252AA similar – FR	G5	D10FR60LA	600	10	110	140	-55 to 150	2.1	10	10	28	–	○	○	A series
		D15FR60LA	600	15	95	220	-55 to 150	2.1	15	10	30	–	○	○	A series
– SC-83 similar FD	H2-1	D8FD60LUS	600	8	120	60	175	3.6	8	50	25	–	–	○	US series
		D20FD60LU	600	20	93	160	150	3.0	20	25	35	–	○	○	–
		D30FD60K	600	30	102	300	150	1.7	30	10	95	–	–	■	K series

N : New product *1 : Tl *2 : Ta ■ : Please contact us.

Axial

Package: JEDEC Code / JEITA Code / House Name	Fig.	Type No.	Absolute Maximum Ratings: V_{RRM} [V]	I_F (AV) [A]	Conditions Ta [℃]	I_{FSM} [A]	T_j [℃]	Electrical Characteristics: V_F (max) [V]	Conditions I_F [A]	I_R (max) $V_R=V_{RM}$ [μA]	trr (max) [ns]	Halogen free	Based on AEC-Q101	Automotive	Series
– – AX057	A1	D1NF60	600	0.8	25	50	150	1.3	0.8	10	400	–	–	–	–
		D1NK60	600	0.8	26	35	150	1.3	0.8	10	75	–	–	–	K series
		D1NL20U	200	1	25	25	150	0.98	1	10	35	–	–	–	–
		D1NL40U	400	1	137 *1	50	150	1.25	1	10	25	–	–	–	–
		D1NK100	1000	1	127 *1	30	150	2.1	1	10	75	–	–	–	K series
– – AX078	A4-1	D2L20U	200	1.5	125 *1	40	150	0.98	1.5	10	35	–	–	–	–
		D2L40U	400	2	108 *1	80	150	1.25	2	10	35	–	–	–	–
– – AX10	A5-1	S2L20U	200	1.5	25	50	150	0.98	1.5	10	35	–	–	–	–
		S2L60	600	1.5	125 *1	50	150	1.5	1.5	10	50	–	–	–	–
		S2L40U	400	2	120 *1	100	150	1.25	2	10	35	–	–	–	–
		S2K100	1000	2	91 *1	65	150	2.1	2	10	75	–	–	–	K series
– – AX14	A7	S3L60	600	2.2	132 *1	60	150	1.5	2.2	10	50	–	–	–	–
		S3L20U	200	3	128 *1	60	150	0.98	2.1	10	35	–	–	–	–
		S3L40U	400	3	126 *1	150	150	1.25	3	10	35	–	–	–	–
		S3K60	600	3	123 *1	120	150	1.3	3	10	100	–	–	–	K series

*1 : Tl

FAST RECOVERY DIODES

Single

Two Terminal Type

Package	JEDEC Code JEITA Code House Name	Fig.	$I_{F(AV)}$ [A]	V_{RRM}[V] 200	400	600	Remarks
28.5 × 10.0 × 4.5(mm)	– SC-91A FTO-220	J1	3			SF3L60U	
			5			SF5L60U	
			10			SF10L60U	
			20			SF20L60U	
28.5 × 10.0 × 4.5(mm)	– SC-91 FTO-220AG	J3	3			SF3K60M	
			5		SF5L40UM	SF5K60M	
			8			SF8K60USM SF8K60M	
			10			SF10K60M SF10L60MVM SF10L60MSM N SF10L60AM	
			20			SF20K60M SF20L60MVM SF20L60MSM N SF20L60AM	
28.5 × 10.0 × 4.5(mm)	– SC-91 FTO-220G	J4	5	SG5L20USM			
			10	SG10L20USM			
41.0 × 16.0 × 5.0(mm)	TO-247AD – MTO-3PT	K2	20			S20K60T	
			30			S30K60T	

N : New product

Three Terminal Type

Package	JEDEC Code JEITA Code House Name	Fig.	$I_{F(AV)}$ [A]	V_{RRM}[V] 600	1000	1200	Remarks
41.0 × 16.0 × 5.0(mm)	TO-247AD – MTO-3PV	K6	20		S20K100V		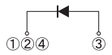
			30	S30K60V	S30K100V		

Center Tap,Common Cathode

Surface Mount

Package	JEDEC Code JEITA Code House Name	Fig.	$I_{F(AV)}$ [A]	V_{RRM}[V] 200	300	400	600	Remarks
9.5 × 6.6 × 2.65(mm)	– SC-63 E-pack	G1-1	5	DE5LC20U				
13.2 × 10.2 × 4.7(mm)	– SC-83 similar STO-220	H1-1	10	DF10LC20U	DF10LC30			
			20	DF20LC20US	DF20LC30			
13.2 × 10.2 × 4.6(mm)	– SC-83 similar FD	H2-2	20	D20FDC20L D20FDC20LUS				

Single

Two Terminal Type

Package JEDEC Code JEITA Code House Name	Fig.	Type No.	Absolute Maximum Ratings V_{RRM} [V]	I_F (AV) [A]	Conditions Tc [℃]	I_{FSM} [A]	T_j [℃]	Electrical Characteristics V_F (max) [V]	Conditions I_F [A]	I_R (max) $V_R=V_{RM}$ [μA]	trr (max) [ns]	Halogen free	Based on AEC-Q101	Automotive	Series
– SC-91A FTO-220	J1	SF3L60U	600	3	115	40	150	3.00	3	25	20	–	–	–	–
		SF5L60U	600	5	96	60	150	3.00	5	25	25	–	–	–	–
		SF10L60U	600	10	85	120	150	3.00	10	25	25	–	–	■	–
		SF20L60U	600	20	68	180	150	3.00	20	25	35	–	–	■	–
– SC-91 FTO-220AG	J3	SF3K60M	600	3	132	90	150	1.45	3	10	80	–	–	–	K series
		SF5L40UM	400	5	121	100	150	1.25	5	10	30	–	–	■	–
		SF5K60M	600	5	119	120	150	1.50	5	10	85	–	–	■	K series
		SF8K60USM	600	8	70	60	150	3.60	8	50	25	–	–	–	US series
		SF8K60M	600	8	108	150	150	1.50	8	10	90	–	–	■	K series
		SF10K60M	600	10	106	180	150	1.50	10	10	95	–	–	–	K series
		SF10L60MVM	600	10	119	200	150	1.10	10	10	115	–	–	■	ML series
		SF10L60MSM	600	10	110	160	150	1.37	10	10	60	–	–	■	ML series
		N SF10L60AM	600	10	106	180	-55 to 150	2.10	10	10	28	–	–	–	A series
		SF20K60M	600	20	96	240	150	1.50	20	10	95	–	–	–	K series
		SF20L60MVM	600	20	106	250	150	1.10	20	10	130	–	–	■	ML series
		SF20L60MSM	600	20	96	220	150	1.37	20	10	70	–	–	■	ML series
		N SF20L60AM	600	20	77	260	-55 to 150	2.10	20	10	35	–	–	–	A series
– SC-91 FTO-220G	J4	SG5L20USM	200	5	125	90	150	0.96	5	10	25	–	–	–	–
		SG10L20USM	200	10	101	200	150	0.96	10	10	25	–	–	–	–
TO-247AD – MTO-3PT	K2	S20K60T	600	20	121	300	150	1.50	20	10	95	–	–	–	K series
		S30K60T	600	30	123	450	150	1.50	30	10	100	–	–	–	K series

N : New product ■ : Please contact us.

Three Terminal Type

Package JEDEC Code JEITA Code House Name	Fig.	Type No.	Absolute Maximum Ratings V_{RRM} [V]	I_F (AV) [A]	Conditions Tc [℃]	I_{FSM} [A]	T_j [℃]	Electrical Characteristics V_F (max) [V]	Conditions I_F [A]	I_R (max) $V_R=V_{RM}$ [μA]	trr (max) [ns]	Halogen free	Based on AEC-Q101	Automotive	Series
TO-247AD – MTO-3PV	K6	S20K100V	1000	20	127	550	150	2.10	20	10	120	–	–	○	K series
		S30K60V	600	30	108	450	150	1.50	30	10	100	–	–	○	K series
		S30K100V	1000	30	116	600	150	2.10	30	10	120	–	–	○	K series

Center Tap,Common Cathode

Surface Mount

Package JEDEC Code JEITA Code House Name	Fig.	Type No.	Absolute Maximum Ratings V_{RRM} [V]	I_F (AV) [A]	Conditions Tc [℃]	I_{FSM} [A]	T_j [℃]	Electrical Characteristics V_F (max) [V]	Conditions I_F [A]	I_R (max) $V_R=V_{RM}$ [μA]	trr (max) [ns]	Halogen free	Based on AEC-Q101	Automotive	Series
– SC-63 E-pack	G1-1	DE5LC20U	200	5	81	50	150	0.98	2.5	10	35	–	–	■	–
– SC-83 similar STO-220	H1-1	DF10LC20U	200	10	127	80	150	0.98	5	10	35	–	–	–	–
		DF10LC30	300	10	124	80	150	1.30	5	25	30	–	–	–	–
		DF20LC20US	200	20	125	180	150	0.96	10	10	25	–	–	–	–
		DF20LC30	300	20	124	180	150	1.30	10	25	30	–	–	–	–
– SC-83 similar FD	H2-2	D20FDC20L	200	20	113	100	175	1.20	10	10	30	–	○	○	–
		D20FDC20LUS	200	20	125	180	150	0.96	10	10	25	–	–	○	–

■ : Please contact us.

FAST RECOVERY DIODES

Center Tap,Common Cathode

Three Terminal Type

Package	JEDEC Code JEITA Code House Name	Fig.	$I_{F(AV)}$ [A]	V_{RRM}[V] 200	300	400	600	Remarks
28.5 × 10.0 × 4.5(mm)	– SC-91 FTO-220AG	J8-1	5			SF5LC40UM		
			10			SF10LC40UM	SF10KC60M	
			20		SF20LC30M		SF20KC60M	
28.5 × 10.0 × 4.5(mm)	– SC-91 FTO-220G	J9	5	SG5LC20USM				
			10	SG10LC20USM				
			20	SG20LC20USM				
41.0 × 16.0 × 5.0(mm)	TO-247AD – MTO-3PT	K5-2	20	S20LC20UST	S20LC30T	S20LC40UT	S20LC60UST	
41.0 × 16.0 × 5.0(mm)	TO-247AD – MTO-3PV	K7-1	20			S20LC40UV	S20LC60USV	

Center Tap,Common Cathode

Three Terminal Type

Package: JEDEC Code / JEITA Code / House Name	Fig.	Type No.	Absolute Maximum Ratings: V_{RRM} [V]	I_F (AV) [A]	Conditions Tc [℃]	I_{FSM} [A]	T_j [℃]	Electrical Characteristics: V_F (max) [V]	Conditions I_F [A]	I_R (max) $V_R=V_{RM}$ [μA]	trr (max) [ns]	Halogen free	Based on AEC-Q101	Automotive	Series
– SC-91 FTO-220AG	J8-1	SF5LC40UM	400	5	132	80	150	1.25	2.5	10	30	–	–	–	–
		SF10LC40UM	400	10	120	100	150	1.25	5	10	30	–	–	–	–
		SF10KC60M	600	10	109	120	150	1.50	5	10	85	–	–	■	K series
		SF20LC30M	300	20	107	250	150	1.30	10	25	30	–	–	–	–
		SF20KC60M	600	20	97	180	150	1.50	10	10	95	–	–	■	K series
– SC-91 FTO-220G	J9	SG5LC20USM	200	5	133	70	150	0.96	2.5	10	25	–	–	–	–
		SG10LC20USM	200	10	122	90	150	0.96	5	10	25	–	–	–	–
		SG20LC20USM	200	20	95	150	150	0.96	10	10	25	–	–	–	–
TO-247AD – MTO-3PT	K5-2	S20LC20UST	200	20	126	120	150	0.96	10	10	25	–	–	–	–
		S20LC30T	300	20	124	220	150	1.30	10	25	30	–	–	–	–
		S20LC40UT	400	20	123	130	150	1.25	10	10	30	–	–	–	–
		S20LC60UST	600	20	63	60	150	3.60	10	50	25	–	–	–	–
TO-247AD – MTO-3PV	K7-1	S20LC40UV	400	20	123	200	150	1.25	10	10	30	–	–	○	–
		S20LC60USV	600	20	65	60	150	3.60	10	50	25	–	–	○	–

■ : Please contact us.

THYRISTORS

The Thyristor, in its normal state, will block an applied voltage in either direction, but when an appropriate current pulse is applied to the gate, current will flow through the anode to the cathode thus turning on power to the load circuit.
The Thyristor has a planar passivation, and is available in both the general reverse-blocking type and the type without reverse voltage.
The Thyristor without reverse voltage is suitable for a circuit limiting inrush current.

Thyristors

Package		10.0 × 6.6 × 2.3(mm)		28.5 × 10.0 × 4.5(mm)	
JEDEC Code JEITA Code House Name		TO-252AA – FB		– SC-91 FTO-220AG	
Fig.		G2-2		J8-5	
Internal Circuit		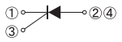		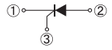	
$I_{T(AV)}$ [A]		3	5	5	8
V_{DRM} [V]	400	KC3FB40H	KC5FB40H		
	600		KC5FB60H KC5FB60HR KC5FB60HRT	N KC5SF60HRT	
	800				N KC8SF80

N : New product

Thyristors

Package		Type No.	Absolute Maximum Ratings						Electrical Characteristics					Halogen free	Based on AEC-Q101	Automotive
JEDEC Code JEITA Code House Name	Fig.		V_{DRM} [V]	V_{RRM} [V]	I_T (AV) [A]	Conditions Tc [℃]	I_{TSM} [A]	T_j [℃]	V_{TM} (max) [V]	Conditions I_{TM} [A]	V_{GT} (max) [V]	I_{GT} (max) [μA]	I_H (max) [mA]			
TO-252AA – FB	G2-2	KC3FB40H	400	400	3	111	40	-40 to 125	1.4	4	0.8	100	5	–	–	–
		KC5FB40H	400	400	5	101	65	-40 to 125	1.6	10	0.8	200	typ.1	–	–	–
		KC5FB60H	600	600	5	98	90	-40 to 125	1.8	15	0.8	100	5	–	–	–
		KC5FB60HR	600	–	5	98	90	-40 to 125	1.8	15	0.8	100	5	–	–	–
		KC5FB60HRT	600	–	5	123	90	-55 to 150	1.8	15	0.8	100	5	–	–	–
– SC-91 FTO-220AG	J8-5	N KC5SF60HRT	600	–	5	127	82	-40 to 150	1.8	15	0.8	100	5	–	–	–
		N KC8SF80	800	800	8	130	120	-40 to 150	1.5	20	1.0	15mA	100	–	–	–

N : New product

SIDACs

SIDAC series are semiconductor devices energized by the addition of a specific voltage. They are commonly used for switching devices or pulse generating devices.

Bi-directional (K1V series)

■ Features
1. Symmetrical characteristics.
2. Operating directly from the AC mains, and can be used in all kinds of pulse generating circuits.
3. The glass passivation ensures high reliability.

■ Applications
1. Pulse generation : gas igniters,HID(high intensity discharge)lamp drive circuit,etc.
2. AC switching : drive circuit for switching power supplies,voltage detecting circuits,etc.
3. Over voltage protection : AC line surge protection,capacitor rupture prevention,etc.

Package		5.0 × 2.5 × 2.0(mm)	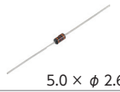 5.0 × φ 2.6(mm)	7.0 × φ 4.4(mm)	
JEDEC Code JEITA Code House Name		DO-214AC – 1F	– – AX06	– – AX10	
Fig.		B4-3	A2-1	A5-3	A6
Internal Circuit		①—N—②			
V_{DRM}[V]	5	K1VZL09			
	15	K1VZL20			
	90		K1V(A)10 K1V(A)11 K1V(A)12	K1V10 K1V11 K1V12	
	115		K1V(A)16	K1V14	
	180			K1V22 K1V24 K1V26	K1V22(W) K1V24(W) K1V26(W)
	270				K1V36(W) K1V38(W)

Uni-directional (G1V series)

■ Features
1. Uni-directional characteristics.
2. Smaller package than bi-directional SIDAC.
3. Switching operation from DC power for pulse generation.
4. The glass passivation ensures high reliability.

■ Applications
1. Pulse generation : gas igniters,negative ion generators, HID(high intensity discharge) lamp drive circuit,etc.
2. Over voltage protection : DC line surge protection.

Package		5.0 × 2.5 × 2.0(mm)	5.0 × φ 2.6(mm)	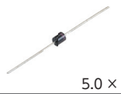 5.0 × φ 4.0(mm)
JEDEC Code JEITA Code House Name		DO-214AC – 1F	– – AX06	– – AX078
Fig.		B3-3	A2-3	A4-3
Internal Circuit		①—▷|—②		
$V_{DRM(A)}$ [V]	70	G1VL8C	G1V(A)8C	
	90	G1VL10C	G1V(A)10C	
	100		G1V(A)12C	
	110		G1V(A)13C	
	115		G1V(A)15C	
	120	G1VL15C	G1V(A)14C	
	170	G1VL20C	G1V(A)20C	G1V(B)20C
	190	G1VL22C G1VL24C		G1V(B)22C
	210			G1V(B)24C

Bi-directional (K1V series)

Surface Mount

Package		Type No.	Absolute Maximum Ratings					Electrical Characteristics							Halogen free	Automotive
JEDEC Code JEITA Code House Name	Fig.		V_{DRM} [V]	I_T [A]	Conditions Tl [℃]	Tstg [℃]	Tj [℃]	V_{BO} [V]	I_{DRM} (max) [μA]	Conditions V_D [V]	I_{BO} (max) [mA]	I_H (typ) [mA]	V_T (max) [V]	Conditions I_T [A]		
DO-214AC – 1F	B4-3	K1VZL09	5	0.5	110	-40 to 125	125	8 to 12	5	5	20	20	1.2	0.5	–	–
		K1VZL20	15	0.5	110	-40 to 125	125	18 to 22	5	15	20	20	1.2	0.5	–	–

Axial

Package		Type No.	Absolute Maximum Ratings								Electrical Characteristics				Halogen free	Automotive
JEDEC Code JEITA Code House Name	Fig.		V_{DRM} [V]	I_T [A]	Conditions Tl [℃]	I_{TSM} [A]	I_{TRM} [A]	Conditions f [Hz]	di_T/dt [A/μs]	Tj [℃]	V_{BO} [V]	I_H (typ) [mA]	V_T (max) [V]	Conditions I_T [A]		
– – AX06	A2-1	K1V(A)10	90	1	109	16	60	60	50	125	95 to 113	50	1.6	1	–	–
		K1V(A)11	90	1	109	16	60	60	50	125	104 to 118	50	1.6	1	–	–
		K1V(A)12	90	1	109	16	60	60	50	125	110 to 125	50	1.6	1	–	–
		K1V(A)16	115	1	98	16	60	60	50	125	145 to 170	50	1.6	1	–	–
– – AX10	A5-3	K1V10	90	1	112	20	80	60	80	125	95 to 113	50	1.5	1	–	–
		K1V11	90	1	112	20	80	60	80	125	104 to 118	50	1.5	1	–	–
		K1V12	90	1	112	20	80	60	80	125	110 to 125	50	1.5	1	–	–
		K1V14	115	1	109	20	80	60	80	125	125 to 150	30	1.5	1	–	–
		K1V22	180	1	108	20	50	60	80	125	200 to 230	20	1.5	1	–	–
		K1V24	180	1	108	20	50	60	80	125	220 to 250	20	1.5	1	–	–
		K1V26	180	1	108	20	50	60	80	125	240 to 270	20	1.5	1	–	–
	A6	K1V22(W)	180	1	91	16	50	60	80	125	200 to 230	50	3	1	–	–
		K1V24(W)	180	1	91	16	50	60	80	125	220 to 250	50	3	1	–	–
		K1V26(W)	180	1	91	16	50	60	80	125	240 to 265	50	3	1	–	–
		K1V36(W)	270	1	92	13	40	60	50	125	340 to 380	50	3	1	–	–
		K1V38(W)	270	1	92	13	40	60	80	125	360 to 400	50	3	1	–	–

Uni-directional (G1V series)

Surface Mount

Package		Type No.	Absolute Maximum Ratings							Electrical Characteristics				Halogen free	Automotive
JEDEC Code JEITA Code House Name	Fig.		$V_{DRM(A)}$ [V]	I_T [A]	Conditions Tl [℃]	I_{TRM} [A]	Conditions f [Hz]	di_T/dt [A/μs]	Tj [℃]	$V_{BO(A)}$ [V]	$I_{H(A),(K)}$ (max) [mA]	$V_{T(A),(K)}$ (max) [V]	Conditions I_T [A]		
DO-214AC – 1F	B3-3	G1VL8C	70	1	98	80	60	150	125	75 to 90	100	1.5	1	–	–
		G1VL10C	90	1	98	150	60	150	125	95 to 110	100	1.5	1	–	–
		G1VL15C	120	1	98	120	60	150	125	142 to 157	60	1.5	1	–	–
		G1VL20C	170	1	98	120	60	150	125	190 to 210	60	1.5	1	–	–
		G1VL22C	190	1	98	280	5	150	125	210 to 230	60	1.5	1	–	–
		G1VL24C	190	1	98	280	5	150	150	230 to 250	60	1.5	1	–	–

Axial

Package		Type No.	Absolute Maximum Ratings							Electrical Characteristics				Halogen free	Automotive
JEDEC Code JEITA Code House Name	Fig.		$V_{DRM(A)}$ [V]	I_T [A]	Conditions Tl [℃]	I_{TRM} [A]	Conditions f [Hz]	di_T/dt [A/μs]	Tj [℃]	$V_{BO(A)}$ [V]	$I_{H(A),(K)}$ (max) [mA]	$V_{T(A),(K)}$ (max) [V]	Conditions I_T [A]		
– – AX06	A2-3	G1V(A)8C	70	1	98	80	60	80	125	75 to 90	100	1.5	1	–	–
		G1V(A)10C	90	1	98	80	60	80	125	95 to 110	60	1.5	1	–	–
		G1V(A)12C	100	1	98	80	60	80	125	110 to 130	60	1.5	1	–	–
		G1V(A)13C	110	1	98	80	60	80	125	120 to 138	60	1.5	1	–	–
		G1V(A)14C	120	1	98	80	60	80	125	130 to 150	60	1.5	1	–	–
		G1V(A)15C	115	1	98	80	60	80	125	142 to 157	60	1.5	1	–	–
		G1V(A)20C	170	1	98	80	60	80	125	190 to 210	60	1.5	1	–	–
– – AX078	A4-3	G1V(B)20C	170	1	102	120	60	220	150	190 to 210	60	1.5	1	–	–
		G1V(B)22C	190	1	98	160	60	220	125	210 to 230	60	1.5	1	–	–
		G1V(B)24C	210	1	102	120	60	220	150	230 to 250	60	1.5	1	–	–

TRIACs

TRIACs are bidirectional Thyristors.

Our TRIACs are easy to use for motor and heater controls due to balanced gate sensitivity and (di/dt)c.

Our lineup ranges from V_{DRM}=600 to 800V, $I_{T(RMS)}$=3 to 20A.

TRIACs (Triode for Alternating Current)

Package		10.0 × 6.6 × 2.3(mm)	28.5 × 10.0 × 4.5(mm)
JEDEC Code JEITA Code House Name		TO-252AA – FB	– SC-91 FTO-220AG
Fig.		G2-3	J8-4
Internal Circuit		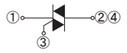	
V_{DRM}[V]		600	
$I_{T(RMS)}$ [A]	3	N KD3FB60	N KD3SF60E N KD3SF60
	5		N KD5SF60
	8		N KD8SF60
	12		N KD12SF60
	16		N KD16SF60
	20		N KD20SF60

N : New product

TRIACs (Triode for Alternating Current)

Surface Mount

Package		Type No.	Absolute Maximum Ratings			Electrical Characteristics						Halogen free	Based on AEC-Q101	Automotive
JEDEC Code JEITA Code House Name	Fig.		V_{DRM} [V]	I_T (RMS) [A]	Tj [℃]	V_{TM} (max) [V]	Conditions I_{TM} [A]	V_{GT} (max) (Ⅰ,Ⅱ,Ⅲ)∗ [V]	I_{GT} (max) (Ⅰ,Ⅱ,Ⅲ)∗ [mA]	(dv/dt)c (min) (Tj=150℃,V_D=2/3V_{DRM}) [V/μs]	Conditions (di/dt)c [A/ms]			
TO-252AA – FB	G2-3	N KD3FB60	600	3	-40 to 150	1.7	4.5	1.5	15	1	-1.5	–	–	–

N : New product ∗ : Operation mode Ⅳ is not guaranteed.

Two Terminal Type

Package		Type No.	Absolute Maximum Ratings			Electrical Characteristics						Halogen free	Based on AEC-Q101	Automotive
JEDEC Code JEITA Code House Name	Fig.		V_{DRM} [V]	I_T (RMS) [A]	Tj [℃]	V_{TM} (max) [V]	Conditions I_{TM} [A]	V_{GT} (max) (Ⅰ,Ⅱ,Ⅲ)∗ [V]	I_{GT} (max) (Ⅰ,Ⅱ,Ⅲ)∗ [mA]	(dv/dt)c (min) (Tj=150℃,V_D=2/3V_{DRM}) [V/μs]	Conditions (di/dt)c [A/ms]			
– SC-91 FTO-220AG	J8-4	N KD3SF60E	600	3	-40 to 150	1.5	4.5	1.5	10	–	–	–	–	–
		N KD3SF60	600	3	-40 to 150	1.5	4.5	1.5	20	1	-1.5	–	–	–
		N KD5SF60	600	5	-40 to 150	1.8	7	1.5	20	1	-2.5	–	–	–
		N KD8SF60	600	8	-40 to 150	1.6	12	1.5	30	1	-4.0	–	–	–
		N KD12SF60	600	12	-40 to 150	1.6	20	1.5	30	1	-6.0	–	–	–
		N KD16SF60	600	16	-40 to 150	1.5	25	1.5	30	1	-8.0	–	–	–
		N KD20SF60	600	20	-40 to 150	1.4	30	1.5	30	1	-10.0	–	–	–

N : New product ∗ : Operation mode Ⅳ is not guaranteed.

	Terminal Characteristics		
Operation Mode	① T1	②④ T2	③ G
Ⅰ	–	+	+
Ⅱ	–	+	–
Ⅲ	+	–	–
Ⅳ	+	–	+

SURGE ABSORBERS

Surge Absorbers are semiconductor devices of the Thyristor type that turns on when triggered by their rated voltage.
They are commonly used for lightning surge protection in communications equipment.

Thyristor Surge Suppressors

■ Features
1.Bi-directional or uni-directional characteristics.
2.High speed response.
3.Large surge current capacity.
4.Repetitive use against surges is possible.

■ Applications
1.Lightning surge adsorption for communications circuits.
2.Lightning surge adsorption for transmitters and switchboards.
3.Surge protection for ISDN terminals.

Series		KL Series	KU Series		KP Series
Package		5.0 × 2.5 × 2.0(mm)	5.1 × 3.75 × 2.0(mm)		7.6 × 4.0 × 2.8(mm)
JEDEC Code JEITA Code House Name		DO-214AC – 1F	DO-214AA similar – M2F		– – 2F
Fig.		B4-3	B7	B8	B9-4
Internal Circuit				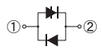	
Off-state Voltage V_D [V]	5	KL3Z07			
	15	KL3Z18			
	58	KL3L07			
	63		KU10L08		
	70		KU4F8		
	90			KU10NU11	
	92				KP20NU11 KP40NU11
	100		KU4F12		
	115			KU10NU13	
	120	KL3N14	KU10N14 KU15N14		
	175	KL3R20			
	180				KP40RU22
	190		KU10R23NS		
	220		KU10R27NS		
	250		KU10R29NS		
	275		KU5S31NS KU10S31NS KU10S35NS		

Varistor

■ Features
1.Bi-directional surge absorption is possible.
2.Low junction capacitance.

■ Applications
1.Telephone set surge absorption.
2.Digital communications circuit surge absorption.
3.ISDN terminal surge absorption.

Package		5.0 × 2.5 × 2.0(mm)
JEDEC Code JEITA Code House Name		DO-214AC – 1F
Fig.		B4-1
Internal Circuit		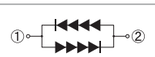
V_F [V]	2.3 ± 0.25	VR61F1

Thyristor Surge Suppressors

Package		Type No.	Absolute Maximum Ratings				Electrical Characteristics			Halogen free	UL	Automotive
JEDEC Code JEITA Code House Name	Fig.		V_{DRM} [V]	I_{TSM} [A]	Conditions [μs]	Tj [℃]	V_{BO} (min) [V]	I_H (min) [mA]	Ct (max) [pF]			
DO-214AC – 1F	B4-3	KL3Z07	5	30	10/1000	125	5.5 *1	50	–	–	–	–
		KL3Z18	15	30	10/1000	125	15.5 *1	50	–	–	–	–
		KL3L07	58	30	10/1000	125	65	100	90	–	–	–
		KL3N14	120	30	10/1000	125	130	100	50	–	–	–
		KL3R20	175	30	10/1000	125	180	100	30	–	–	–
DO-214AA similar – M2F	B7	KU10L08	63	100	10/1000	125	70	100	180	–	®	–
		KU4F8	70	40	10/1000	125	75	100	100	–	–	–
	B8	KU10NU11	60	100	10/1000	125	100	150	–	–	–	–
	B7	KU4F12	100	40	10/1000	125	110	100	100	–	–	–
	B8	KU10NU13	60	100	10/1000	125	120	100	–	–	–	–
	B7	KU10N14	120	100	10/1000	125	125	100	140	–	®	–
		KU15N14	120	150	10/1000	125	125	100	110	–	®	–
		KU10R23NS	190	100	10/1000	125	290 *2	100	90	–	–	–
		KU10R27NS	220	100	10/1000	125	320 *2	100	70	–	®	–
		KU10R29NS	250	100	10/1000	125	400 *2	100	70	–	®	–
		KU5S31NS	275	50	10/1000	125	420 *2	150	70	–	–	–
		KU10S31NS	275	100	10/1000	125	420 *2	100	90	–	®	–
		KU10S35NS	275	100	10/1000	125	450 *2	100	90	–	–	–
– – 2F	B9-4	KP20NU11	60	325	10/700	125	100	150	295 *3	–	–	–
		KP40NU11	60	500	10/700	125	100	150	485 *3	–	–	–
		KP40RU22	60	500	10/700	125	195	100	285 *3	–	–	–

*1 : V_{BR} *2 : V_{CL}(max) *3 : typ. ® : UL497B recognized (UL File No.E183905)

Varistor

Package		Type No.	Absolute Maximum Ratings			Electrical Characteristics		Halogen free	Automotive
JEDEC Code JEITA Code House Name	Fig.		$I_{F(RMS)}$ [A]	$I_{FSM(R,M,S)}$ [A]	Tj [℃]	V_F [V]	Conditions I_F [mA]		
DO-214AC – 1F	B4-1	VR61F1	0.37(*1)/0.28(*2)	7.5	-55 to 150	2.3 ± 0.25	1	–	–

*1 : On alumina substrate *2 : On glass-epoxy substrate

TVS (Transient Surge Suppressor)

TVSs are low voltage PN junction type devices.
These devices utilize technologically stable glass passivation (an in-house design) with a structural advantage that brings high resistance against heat and humidity.
They are available with a voltage range between 12 to 320V and peak pulse power from 200 to 8000W.

TVS (Transient Voltage Suppressor)

■ Features
1.High speed response.
2.Absorption energy tolerance capacity.
3.Narrow clamping voltage width.

■ Applications
1.IC protection for telephones.
2.IC protection against abnormal voltage.
3.Protection for load dump noise.

Peak pulse power		200W			600W	2000W		6000 ~ 8000W (Load Dump Surge Protecting)		
Package		3.5 × 1.6 × 0.8(mm)	5.0 × 2.5 × 2.0(mm)		4.7 × 2.4 × 0.98(mm)	7.6 × 4.0 × 2.8(mm)		9.0 × 7.0 × 9.0(mm)	13.2 × 10.2 × 4.7(mm)	15.0 × 10.2 × 4.0(mm)
JEDEC Code JEITA Code House Name		DO-219AB similar SC-109 G1F	DO-214AC – 1F	DO-214AC – 1F	– SC-110B CE	– – 2F		– – MCP	– SC-83 similar STO-220	TO-263AB – FZ
Fig.		B1-2	B3-2	B4-2	B5-2	B9-5	B10	E1	H1-6	H6
Internal Circuit		①—② (Zener)		①—② (Bidirectional)	①—② (Zener)	①—② (Zener)		① ② (Bidirectional)	① NC ②④ ③ (Bidirectional)	① ②④ ③ (Zener)
V_{BR} (typ) [V]	12.5	ST02-12G1	ST04-12F1							
	14	ST02-14G1	ST04-14F1					ST80-14MF		
	16	ST02-16G1	ST04-16F1							
	18	ST02-18G1	ST04-18F1	DL04-18F1	N ST06-18CE					
	20	ST02-20G1	ST04-20F1							
	24	ST02-24G1	ST04-24F1							
	27	ST02-27G1	ST04-27F1		N ST06-27CE		ST20-27F2	ST70-27MF	ST70-27F	N ST70-27FZ
	30	ST02-30G1	ST04-30F1		N ST06-30CE		ST20-30F2	ST70-30MF		
	33	ST02-33G1	ST04-33F1	DL04-33F1	N ST06-33CE		ST20-33F2			
	36	ST02-36G1	ST04-36F1	DL04-36F1	N ST06-36CE		ST20-36F2			
	39	STO2-39G1	ST04-39F1		N ST06-39CE					
	40							ST60-40MF		
	43	ST02-43G1	ST03-43F1							
	47	ST02-47G1	ST03-47F1			ST20-47F2				
	48							ST60-48MF		
	58	ST02-58G1	ST03-58F1							
	68		ST03-68F1							
	75		ST02-75F1							
	82		ST02-82F1							
	100		ST02-100F1							
	120		ST02-120F1							
	145		ST02-140F1							
	170		ST02-170F1							
	200		ST02-200F1							
	240		ST03-240F1							
	280		ST02-280F1							
	320		ST02-320F1							

N : New product

TVS (Transient Voltage Suppressor)

Package			Absolute Maximum Ratings				Electrical Characteristics					Halogen free	Based on AEC-Q101	Automotive
JEDEC Code JEITA Code House Name	Fig.	Type No.	P_{RSM} [W]	V_R (DC) [V]	I_{RSM} [A]	Tj [℃]	V_{BR} (min) [V]	V_{BR} (max) [V]	Conditions I_R [mA]	I_R (max) [μA]	Conditions V_R [V]			
DO-219AB similar SC-109 G1F	B1-2	ST02-12G1	200	9	11.2	-55 to 175	11.5	13.5	5	5	9	–	○	○
		ST02-14G1	200	12.8	10.0	-55 to 175	13.5	15	5	5	12.8	–	○	○
		ST02-16G1	200	13.6	9.1	-55 to 175	14.4	17.6	5	5	13.6	–	○	○
		ST02-18G1	200	13	7.5	-55 to 175	16.8	19.1	5	5	13	–	○	○
		ST02-20G1	200	16	6.7	-55 to 175	18.8	22	5	5	16	–	○	○
		ST02-24G1	200	20	5.8	-55 to 175	22	25.6	5	5	20	–	○	○
		ST02-27G1	200	23	5.5	-55 to 175	25.1	28.9	2	5	23	–	○	○
		ST02-30G1	200	24	5.0	-55 to 175	28	32	2	5	24	–	○	○
		ST02-33G1	200	25	4.5	-55 to 175	31	35	2	5	25	–	○	○
		ST02-36G1	200	27	4.0	-55 to 175	34	38	2	5	27	–	○	○
		ST02-39G1	200	30	3.8	-55 to 175	37	41	2	5	30	–	○	○
		ST02-43G1	200	33	3.5	-55 to 175	40	45	2	5	33	–	○	○
		ST02-47G1	195	37	3.0	-55 to 175	42	52	2	5	37	–	■	○
		ST02-58G1	175	45	2.2	-55 to 175	52	64	2	5	45	–	○	○
DO-214AC – 1F	B3-2	ST04-12F1	400	9	24.0	-55 to 175	11.5	13.5	1	5	9	–	○	○
		ST04-14F1	400	12.8	18.0	-55 to 175	13.5	15	1	5	12.8	–	○	○
		ST04-16F1	400	13.6	15.0	-55 to 175	14.4	17.6	1	5	13.6	–	○	○
		ST04-18F1	400	15.3	15.0	-55 to 175	16.8	19.1	1	5	15.3	–	○	○
		ST04-20F1	400	16	15.0	-55 to 175	18.8	21.2	1	5	16	–	○	○
		ST04-24F1	400	20	12.0	-55 to 175	22.8	25.6	1	5	20	–	○	○
		ST04-27F1	400	23	10.0	-55 to 175	24.3	29.7	1	5	23	–	○	○
		ST04-30F1	400	24	8.5	-55 to 175	28	32	1	5	24	–	○	○
		ST04-33F1	400	25	8.0	-55 to 175	31	35	1	5	25	–	○	○
		ST04-36F1	400	27	7.5	-55 to 175	34	38	1	5	27	–	○	○
		ST04-39F1	400	30	7.0	-55 to 175	37	41	1	5	30	–	○	○
		ST03-43F1	300	33	5.0	-55 to 150	40	45	1	5	33	–	○	○
		ST03-47F1	300	37	5.0	-55 to 150	42	52	1	5	37	–	○	○
		ST03-58F1	300	45	4.0	-55 to 150	52	64	1	5	45	–	○	○
		ST03-68F1	300	58	3.0	-55 to 150	64.4	71.2	1	5	58	–	○	○
		ST02-75F1	200	61	2.0	-55 to 150	70	79	1	5	61	–	○	○
		ST02-82F1	200	67	2.0	-55 to 150	74	90	1	5	67	–	○	○
		ST02-100F1	200	80	1.7	-55 to 150	90	110	1	5	80	–	○	○
		ST02-120F1	200	100	1.4	-55 to 150	110	130	1	5	33	–	■	○
		ST02-140F1	200	120	1.0	-55 to 150	130	160	1	5	120	–	■	○
		ST02-170F1	200	145	0.75	-55 to 150	155	185	1	5	145	–	■	○
		ST02-200F1	200	170	0.7	-55 to 150	185	215	1	5	170	–	■	○
		ST03-240F1	310	200	1.0	-55 to 175	220	250	1	5	200	–	■	○
		ST02-280F1	200	230	0.5	-55 to 175	250	300	1	5	230	–	○	○
		ST02-320F1	150	260	0.38	-55 to 175	300	350	1	5	260	–	○	○
DO-214AC – 1F	B4-2	DL04-18F1	400	13	–	-55 to 150	16.8	19.1	5	5	13	–	○	○
		DL04-33F1	400	25	9.5	-55 to 175	31	35	1	5	25	–	○	○
		DL04-36F1	400	27	8.0	-55 to 175	34	38	1	5	27	–	○	○
– SC-110B CE	B5-2	N ST06-18CE	600	13	26.0	-55 to 175	16.8	19.1	1	5	13	–	○	○
		N ST06-27CE	600	23	17.3	-55 to 175	25	29	1	5	23	–	○	○
		N ST06-30CE	600	24	15.0	-55 to 175	28	32	1	5	24	–	○	○
		N ST06-33CE	600	25	14.0	-55 to 175	31	35	1	5	25	–	○	○
		N ST06-36CE	600	27	12.4	-55 to 175	34	38	1	5	27	–	○	○
		N ST06-39CE	600	30	11.0	-55 to 175	37	41	1	5	30	–	○	○
– – 2F	B9-5	ST20-47F2	1700	37	31.0	-55 to 175	42	52	1	5	37	–	○	○
	B10	ST20-27F2	2000	23	54.0	-55 to 175	24.3	29.7	1	5	23	–	○	○
		ST20-30F2	2000	24	50.0	-55 to 175	28	32	1	5	24	–	○	○
		ST20-33F2	2000	25	45.0	-55 to 175	31	35	1	5	25	–	○	○
		ST20-36F2	2000	27	40.0	-55 to 175	34	38	1	5	27	–	○	○
– – MCP	E1	ST80-14MF	8000	12	400	-40 to 150	13	15	1	10	12	–	–	○
		ST70-27MF	7000	23	180	-40 to 150	24.3	29.7	1	5	23	–	–	○
		ST70-30MF	7000	26	160	-40 to 150	27.5	33	1	5	26	–	–	○
		ST60-40MF	6000	32	100	-40 to 150	36.5	44	1	5	32	–	–	○
		ST60-48MF	6000	40	100	-40 to 150	43.2	54	1	5	40	–	–	○
– SC-83 similar STO-220	H1-6	ST70-27F	7000	23	180	-40 to 150	24.3	29.7	1	5	23	–	–	○
TO-263AB – FZ	H6	N ST70-27FZ	7000	23	180	-55 to 175	25	29	1	5	23	○	○	○

N : New product ■ : Please contact us.

TVS (Transient Surge Suppressor)

Power Clampers

■ Features
1.High speed response.
2.Absorption energy tolerance capacity.
3.Narrow clampingvoltage width.
4.Reverse blocking type.

■ Application
1.Snubber circuit in the primary side of switch-mode power supplies.

Package		7.6 × 4.0 × 2.8(mm)	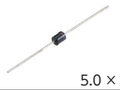 5.0 × ϕ 4.0(mm)	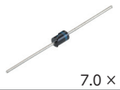 7.0 × ϕ 4.4(mm)
JEDEC Code JEITA Code House Name		– – 2F	– – AX078	– – AX10
Fig.		B9-3	A4-2	A5-2
Internal Circuit				
V_{BR} (typ) [V]	82		ST02D-82	ST03D-82
	145	ST02D-140F2	ST02D-140	ST03D-140
	170	ST02D-170F2	ST02D-170	ST03D-170
	200		ST02D-200	ST03D-200
	240			ST03DH-240
	280			★ ST02DH-280
	320			★ ST02DH-320

★ : Under development

Power Clampers

Surface Mount

Package		Type No.	Absolute Maximum Ratings				Electrical Characteristics						Halogen free	Automotive
				ZD	Di		ZD				Di			
JEDEC Code JEITA Code House Name	Fig.		P_{RSM} [W]	V_{RRM} [V]	$V_{R(DC)}$ [V]	Tj [℃]	V_{BR} (min) [V]	V_{BR} (max) [V]	Conditions I_R [mA]	I_R (max) [μA]	I_R (max) [μA]	Conditions V_R [V]		
– – 2F	B9-3	ST02D-140F2	200	120	600	-40 to 150	130	160	1	5	5	600	–	–
		ST02D-170F2	200	145	600	-40 to 150	155	185	1	5	5	600	–	–

Axial

Package		Type No.	Absolute Maximum Ratings				Electrical Characteristics						Halogen free	Automotive
				ZD	Di		ZD				Di			
JEDEC Code JEITA Code House Name	Fig.		P_{RSM} [W]	V_{RRM} [V]	$V_{R(DC)}$ [V]	Tj [℃]	V_{BR} (min) [V]	V_{BR} (max) [V]	Conditions I_R [mA]	I_R (max) [μA]	I_R (max) [μA]	Conditions V_R [V]		
– – AX078	A4-2	ST02D-82	200	67	600	-40 to 150	74	90	1	5	5	600	–	–
		ST02D-140	200	120	600	-40 to 150	130	160	1	5	5	600	–	–
		ST02D-170	200	145	600	-40 to 150	155	185	1	5	5	600	–	–
		ST02D-200	200	170	600	-40 to 150	185	215	1	5	5	600	–	–
– – AX10	A5-2	ST03D-82	300	67	600	-40 to 150	74	90	1	5	5	600	–	–
		ST03D-140	300	120	600	-40 to 150	130	160	1	5	5	600	–	–
		ST03D-170	300	145	600	-40 to 150	155	185	1	5	5	600	–	–
		ST03D-200	300	170	600	-40 to 150	185	215	1	5	5	600	–	–
		ST03DH-240	300	200	1000	-40 to 150	220	250	1	5	10	1000	–	–
		★ ST02DH-280	300	230	1000	-40 to 150	250	300	1	5	10	1000	–	–
		★ ST02DH-320	300	260	1000	-40 to 150	300	350	1	5	10	1000	–	–

★ : Under development

POWER MOSFETs

The EETMOS series offer world-class performance applying a trench-gate structure with an optimized layout hence lowered Qg.

Series	Feature
EETMOS2	Evenly balanced Ron and Qg
EETMOS3/3Z	Low Ron, Low Qg
EETMOS4	Ultra Low Ron, Low Qg

How to read

P 180 FP 4 S N K

- P: Series E=EETMOS2 S=EETMOS3 Q=EETMOS4
- 180: Vdss/10
- FP: Package
- 4: Vth N=3V typ L=2V typ M=other
- S: ID
- N: K=for Automotive non=for Consumer goods
- K

EETMOS Series (Nch Single)

Surface Mount

Package	JEDEC Code JEITA Code House Name	Fig.	ID [A]	VDSS [V] 40	60	75	100	120	Remarks
6.0 × 4.9 × 1.0(mm)	– – LA	G6	15					P15LA12SL	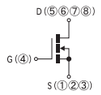
			18					P18LA12SL	
			19				P19LA10SL		
			23				P23LA10SL		
			25					P25LA12SL	
			30				P30LA10SL		
			56	P56LA4SN					
6.05 × 5.30 × 1.05(mm)	MO-235B similar – LF	G7	18		★ P18LF6QLK ★ P18LF6QNK				
			24	★ P24LF4QLK ★ P24LF4QNK					
			25					N P25LF12SLK N P25LF12SL N P25LF12SNK N P25LF12SN	
			32				N P32LF10SLK N P32LF10SL N P32LF10SNK N P32LF10SN		
			38		N P38LF6QLK N P38LF6QNK				
			40					N P40LF12SLK N P40LF12SL N P40LF12SNK N P40LF12SN	
			46			N P46LF7R5SLK N P46LF7R5SL N P46LF7R5SNK N P46LF7R5SN			
			50				N P50LF10SLK N P50LF10SL N P50LF10SNK N P50LF10SN		
			64		N P64LF6QLK N P64LF6QL N P64LF6QNK N P64LF6QN				
			70	N P70LF4QLK N P70LF4QNK					
			72			N P72LF7R5SLK N P72LF7R5SL N P72LF7R5SNK N P72LF7R5SN			
			98		N P98LF6QLK N P98LF6QL N P98LF6QNK N P98LF6QN				
			105	N P105LF4QLK N P105LF4QL N P105LF4QNK N P105LF4QN					
			140	N P140LF4QLK N P140LF4QL N P140LF4QNK N P140LF4QN					
10.0 × 6.6 × 2.3(mm)	TO-252AA – FB	G2-1	8				P8B10SB		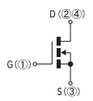
			16		P16B6SB				
			20					P20B12SL P20B12SN	
			24	P24B4SB					
			25		P25B6EB				
			26				P26B10SL P26B10SN		
			30				P30B10EL		
			32					P32B12SN	
			40		P40B6SL		P40B10SL P40B10SN		
			54	P54B4SN					
			60	P60B4EL P60B4SN	P60B6EL P60B6EN P60B6SN				

N : New product ★ : Under development

EETMOS Series (Nch Single)

Surface Mount

Package: JEDEC Code JEITA Code House Name	Fig.	Type No.	Absolute Maximum Ratings: VDSS [V]	ID [A]	IDP [A]	PT [W]	Tch [℃]	Electrical Characteristics: RDS(ON) (typ) [mΩ] VGS=10V	RDS(ON) (max) [mΩ] VGS=10V	Ciss (typ) [pF]	Qg (typ) [nC]	Vth (typ) [V]	Halogen free	Based on AEC-Q101	Automotive	Series
– – LA	G6	P56LA4SN	40	56	168	99	-55 to 150	4.5	5.7	1680	38	3.0	○	–	–	EETMOS3
		P19LA10SL	100	19	57	83	-55 to 150	28	35	1730	38	2.0	○	–	–	EETMOS3
		P23LA10SL	100	23	69	99	-55 to 150	23	29	2080	46	2.0	○	–	–	EETMOS3
		P30LA10SL	100	30	90	142	-55 to 150	16.8	21.0	2890	61	2.0	○	–	–	EETMOS3
		P15LA12SL	120	15	45	83	-55 to 150	40	50	1735	38.5	2.0	○	–	–	EETMOS3
		P18LA12SL	120	18	54	99	-55 to 150	35	44	2090	47	2.0	○	–	–	EETMOS3
		P25LA12SL	120	25	75	142	-55 to 150	24	30	2900	61	2.0	○	–	–	EETMOS3
MO-235B similar – LF	G7	★ P24LF4QLK	40	24	72	50	-55 to 175	10.6	13.2	884	21	2.0	○	○	○	EETMOS4
		★ P24LF4QNK	40	24	72	50	-55 to 175	10.2	12.7	722	12	3.0	○	○	○	EETMOS4
		N P70LF4QLK	40	70	210	123	-55 to 175	3.6	4.5	2360	49	2.0	○	○	○	EETMOS4
		N P70LF4QNK	40	70	210	123	-55 to 175	3.9	4.9	1890	38	3.0	○	○	○	EETMOS4
		N P105LF4QLK	40	105	315	168	-55 to 175	2.1	2.7	4090	76	2.0	○	○	○	EETMOS4
		N P105LF4QL	40	105	315	168	-55 to 175	2.1	2.7	4090	76	2.0	○	–	–	EETMOS4
		N P105LF4QNK	40	105	315	168	-55 to 175	2.2	2.8	3400	62	3.0	○	○	○	EETMOS4
		N P105LF4QN	40	105	315	168	-55 to 175	2.2	2.8	3400	62	3.0	○	–	–	EETMOS4
		N P140LF4QLK	40	140	560	217	-55 to 175	1.17	1.42	6630	122	2.0	○	○	○	EETMOS4
		N P140LF4QL	40	140	560	217	-55 to 175	1.17	1.42	6630	122	2.0	○	–	–	EETMOS4
		N P140LF4QNK	40	140	560	217	-55 to 175	1.22	1.48	5530	96	3.0	○	○	○	EETMOS4
		N P140LF4QN	40	140	560	217	-55 to 175	1.22	1.48	5530	96	3.0	○	–	–	EETMOS4
		★ P18LF6QLK	60	18	54	50	-55 to 175	21	27	920	21	2.0	○	○	○	EETMOS4
		★ P18LF6QNK	60	18	54	50	-55 to 175	21	26	722	12	3.0	○	○	○	EETMOS4
		N P38LF6QLK	60	38	114	123	-55 to 175	7.9	9.9	2340	49	2.0	○	○	○	EETMOS4
		N P38LF6QNK	60	38	114	123	-55 to 175	8.3	10.4	1875	35	3.0	○	○	○	EETMOS4
		N P64LF6QLK	60	64	192	168	-55 to 175	4.5	5.7	4260	77	2.0	○	○	○	EETMOS4
		N P64LF6QL	60	64	192	168	-55 to 175	4.5	5.7	4260	77	2.0	○	–	–	EETMOS4
		N P64LF6QNK	60	64	192	168	-55 to 175	4.5	5.7	3540	61	3.0	○	○	○	EETMOS4
		N P64LF6QN	60	64	192	168	-55 to 175	4.5	5.7	3540	61	3.0	○	–	–	EETMOS4
		N P98LF6QLK	60	98	392	217	-55 to 175	2.5	3.2	6770	126	2.0	○	○	○	EETMOS4
		N P98LF6QL	60	98	392	217	-55 to 175	2.5	3.2	6770	126	2.0	○	–	–	EETMOS4
		N P98LF6QNK	60	98	392	217	-55 to 175	2.6	3.3	5650	96	3.0	○	○	○	EETMOS4
		N P98LF6QN	60	98	392	217	-55 to 175	2.6	3.3	5650	96	3.0	○	–	–	EETMOS4
		N P46LF7R5SLK	75	46	138	168	175	8.2	10.3	2890	61	2.0	○	○	○	EETMOS3
		N P46LF7R5SL	75	46	138	168	-55 to 175	8.2	10.3	2890	61	2.0	○	–	–	EETMOS3
		N P46LF7R5SNK	75	46	138	168	175	8	10	2380	48	3.0	○	○	○	EETMOS3
		N P46LF7R5SN	75	46	138	168	-55 to 175	8	10	2380	48	3.0	○	–	–	EETMOS3
		N P72LF7R5SLK	75	72	288	217	175	4.6	5.8	4870	100	2.0	○	○	○	EETMOS3
		N P72LF7R5SL	75	72	288	217	-55 to 175	4.6	5.8	4870	100	2.0	○	–	–	EETMOS3
		N P72LF7R5SNK	75	72	288	217	175	4.5	5.7	4080	78	3.0	○	○	○	EETMOS3
		N P72LF7R5SN	75	72	288	217	-55 to 175	4.5	5.7	4080	78	3.0	○	–	–	EETMOS3
		N P32LF10SLK	100	32	96	168	175	15.7	19.7	2890	61	2.0	○	○	○	EETMOS3
		N P32LF10SL	100	32	96	168	-55 to 175	15.7	19.7	2890	61	2.0	○	–	–	EETMOS3
		N P32LF10SNK	100	32	96	168	175	14.4	18.0	2430	48	3.0	○	○	○	EETMOS3
		N P32LF10SN	100	32	96	168	-55 to 175	14.4	18.0	2430	48	3.0	○	–	–	EETMOS3
		N P50LF10SLK	100	50	200	217	175	9.0	11.3	4900	102	2.0	○	○	○	EETMOS3
		N P50LF10SL	100	50	200	217	-55 to 175	9.0	11.3	4900	102	2.0	○	–	–	EETMOS3
		N P50LF10SNK	100	50	200	217	175	8.3	10.4	4130	80	3.0	○	○	○	EETMOS3
		N P50LF10SN	100	50	200	217	-55 to 175	8.3	10.4	4130	80	3.0	○	–	–	EETMOS3
		N P25LF12SLK	120	25	75	168	175	23	29	2930	61	2.0	○	○	○	EETMOS3
		N P25LF12SL	120	25	75	168	-55 to 175	23	29	2930	61	2.0	○	–	–	EETMOS3
		N P25LF12SNK	120	25	75	168	175	21	27	2430	48	3.0	○	○	○	EETMOS3
		N P25LF12SN	120	25	75	168	-55 to 175	21	27	2430	48	3.0	○	–	–	EETMOS3
		N P40LF12SLK	120	40	160	217	175	13.0	16.3	5000	102	2.0	○	○	○	EETMOS3
		N P40LF12SL	120	40	160	217	-55 to 175	13.0	16.3	5000	102	2.0	○	–	–	EETMOS3
		N P40LF12SNK	120	40	160	217	175	12.3	15.4	4075	80	3.0	○	○	○	EETMOS3
		N P40LF12SN	120	40	160	217	-55 to 175	12.3	15.4	4075	80	3.0	○	–	–	EETMOS3
TO-252AA – FB	G2-1	P24B4SB	40	24	72	20	-55 to 150	14.8	18.5	645	16.5	2.0	–	–	–	EETMOS3
		P54B4SN	40	54	162	44	-55 to 150	5.0	6.3	1650	36	3.0	–	–	–	EETMOS3
		P60B4EL	40	60	240	62.5	-55 to 150	3.3	4.2	2900	57	2.0	–	–	–	EETMOS2
		P60B4SN	40	60	180	62.5	-55 to 150	3.2	4.0	2830	59	3.0	–	–	–	EETMOS3
		P16B6SB	60	16	48	20	-55 to 150	29	37	655	17	2.0	–	–	–	EETMOS3
		P25B6EB	60	25	70	35	-55 to 150	23	29	785	14.5	2.0	–	–	–	EETMOS2
		P40B6SL	60	40	120	44	-55 to 150	9.5	12.0	2050	43	2.0	–	–	–	EETMOS3
		P60B6EL	60	60	240	62.5	-55 to 150	6.1	7.7	2920	55	2.0	–	–	–	EETMOS2
		P60B6EN	60	60	240	62.5	-55 to 150	6.4	8.0	2550	44	3.0	–	–	–	EETMOS2
		P60B6SN	60	60	180	62.5	-55 to 150	5.3	6.7	2780	55	3.0	–	–	–	EETMOS3
		P8B10SB	100	8	24	20	-55 to 150	75	94	665	16.5	2.0	–	–	–	EETMOS3
		P26B10SL	100	26	78	44	-55 to 150	24	30	1975	43	2.0	–	–	–	EETMOS3
		P26B10SN	100	26	78	44	-55 to 150	22	28	1700	35	3.0	–	–	–	EETMOS3
		P30B10EL	100	30	90	44	-55 to 150	24	30	2000	37	2.0	–	–	–	EETMOS2
		P40B10SL	100	40	120	62.5	-55 to 150	14.8	18.5	3210	66	2.0	–	–	–	EETMOS3
		P40B10SN	100	40	120	62.5	-55 to 150	13.4	16.8	2880	56	3.0	–	–	–	EETMOS3
		P20B12SL	120	20	60	44	-55 to 150	35	44	2110	46	2.0	–	–	–	EETMOS3
		P20B12SN	120	20	60	44	-55 to 150	33	42	1740	37	3.0	–	–	–	EETMOS3
		P32B12SN	120	32	96	62.5	-55 to 150	20	25	2915	57	3.0	–	–	–	EETMOS3

N : New product ★ : Under development

POWER MOSFETs

EETMOS Series (Nch Single)

Surface Mount

Package	JEDEC Code JEITA Code House Name	Fig.	ID [A]	VDSS [V] 40	50	55	60	75	100	120	150	Remarks
 9.5 × 6.6 × 2.65(mm)	TO-252AB similar SC-63 FE	G3-2	8						P8FE10SBK			
			12					P12FE7R5SBK				
			14				P14FE6SBK					
			20							P20FE12SLK		
			22	P22FE4SBK								
			26						P26FE10SLK			
			30	P30FE4SLK			P30FE6SLK	P30FE7R5SLK				
 15.0 × 10.2 × 4.44(mm)	TO-263AB – FG	H4	32								P32FG15SL	
			80				P80FG6EAL	P80FG7R5EN				
			85				P85FG6EAL					
			90			P90FG5R5SL						
			94			P94FG5R5SL						
 15.25 × 10.2 × 4.6(mm)	TO-263AB-1 – FH	H3	80		P80FH5ENK							
			100	P100FH4ENK								
 13.3 × 10.2 × 4.6(mm)	– SC-83 similar FP	H5	70							P70FP12SNK P70FP12SN		
			88						P88FP10SNK P88FP10SN			
			100							P100FP12SNK P100FP12SN		
			126						P126FP10SNK P126FP10SN			
			153				P153FP6SNK P153FP6SN					
			168					P168FP7R5SNK P168FP7R5SN				
			175	P175FP4SNK P175FP4SN								
			180	P180FP4SNK P180FP4SN			P180FP6SNK P180FP6SN					
 15.0 × 10.2 × 4.0(mm)	TO-263SC – FZ-7p	H7	211	P211FZ4QMKA								
			240	N P240FZ4QLA N P240FZ4QNKA								

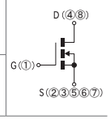

N : New product

THD (Through Hole Device)

Package	JEDEC Code JEITA Code House Name	Fig.	ID [A]	VDSS [V] 40	50	60	70	75	100	120	Remarks
 28.5 × 10.0 × 4.5(mm)	– SC-91 FTO-220AG	J8-2	22						P22F10SN		
			32							P32F12SN	
			34			P34F6EL					
			40						P40F10SN	P40F12SN	
			42			P42F6EN					
			50						P50F10SN		
			55			P55F6EN					
			66					P66F7R5SNK P66F7R5SN			
			70		P70F5EN			P70F7R5EN			
			82					P82F7R5SN			
			86			P86F6SN					
 29.0 × 11.5 × 4.44(mm)	TO-220AB SC-46 FA	J5	100					P100FA7R5EN			

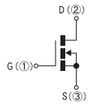

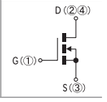

EETMOS Series (Nch Single)

Surface Mount

Package JEDEC Code JEITA Code House Name	Fig.	Type No.	Absolute Maximum Ratings VDSS [V]	ID [A]	IDP [A]	PT [W]	Tch [℃]	Electrical Characteristics RDS(ON) (typ) [mΩ] VGS=10V	RDS(ON) (max) [mΩ] VGS=10V	Ciss (typ) [pF]	Qg (typ) [nC]	Vth (typ) [V]	Halogen free	Based on AEC-Q101	Automotive	Series
TO-252AB similar SC-63 FE	G3-2	P22FE4SBK	40	22	66	24	-55 to 175	15.2	19.0	645	16.5	2.0	–	○	○	EETMOS3
		P30FE4SLK	40	30	90	44	-55 to 175	6.3	8.0	2020	44	2.0	–	○	○	EETMOS3
		P14FE6SBK	60	14	42	24	-55 to 175	31	39	655	16.3	2.0	–	○	○	EETMOS3
		P30FE6SLK	60	30	90	44	-55 to 175	10.9	13.8	2050	43	2.0	–	○	○	EETMOS3
		P12FE7R5SBK	75	12	36	24	-55 to 175	40	50	660	16.6	2.0	–	○	○	EETMOS3
		P30FE7R5SLK	75	30	90	44	-55 to 175	14.1	17.8	2020	45	2.0	–	○	○	EETMOS3
		P8FE10SBK	100	8	24	24	-55 to 175	79	99	665	16.5	2.0	–	○	○	EETMOS3
		P26FE10SLK	100	26	78	44	-55 to 175	24	30	1975	43	2.0	–	○	○	EETMOS3
		P20FE12SLK	120	20	60	44	-55 to 175	35	44	2110	46	2.0	–	○	○	EETMOS3
TO-263AB – FG	H4	P90FG5R5SL	55	90	360	128	150	3.0	3.8	5130	106	2.0	–	–	–	EETMOS3
		P94FG5R5SL	55	94	376	156	150	2.5	3.2	7170	140	2.0	–	–	–	EETMOS3
		P80FG6EAL	60	80	320	128	150	3.6	4.9	4700	90	2.0	–	–	–	EETMOS2
		P85FG6EAL	60	85	340	156	150	3.2	4.3	5700	105	2.0	–	–	–	EETMOS2
		P80FG7R5EN	75	80	320	128	150	5.1	6.4	4100	67	3.0	–	–	–	EETMOS2
		P32FG15SL	150	32	96	100	150	32	40	3530	72	2.0	–	–	–	EETMOS3
TO-263AB-1 – FH	H3	P100FH4ENK	40	100	400	175	150	1.6	2.0	5500	100	3.0	–	–	○	EETMOS2
		P80FH5ENK	50	80	320	128	150	3.0	3.8	4000	70	3.0	–	–	○	EETMOS2
– SC-83 similar FP	H5	P175FP4SNK	40	175	700	178	175	1.3	1.6	5900	116	3.0	○	○	○	EETMOS3
		P175FP4SN	40	175	700	178	175	1.3	1.6	5900	116	3.0	○	–	–	EETMOS3
		P180FP4SNK	40	180	720	238	175	0.95	1.15	9220	160	3.0	○	■	○	EETMOS3
		P180FP4SN	40	180	720	238	175	0.95	1.15	9220	160	3.0	○	–	–	EETMOS3
		P153FP6SNK	60	153	612	178	175	2.4	3.0	5850	105	3.0	○	■	○	EETMOS3
		P153FP6SN	60	153	612	178	175	2.4	3.0	5850	105	3.0	○	–	–	EETMOS3
		P180FP6SNK	60	180	720	238	175	1.6	2.0	9380	158	3.0	○	■	○	EETMOS3
		P180FP6SN	60	180	720	238	175	1.6	2.0	9380	158	3.0	○	–	–	EETMOS3
		P168FP7R5SNK	75	168	672	238	-55 to 175	2.2	2.8	9600	155	3.0	○	■	○	EETMOS3
		P168FP7R5SN	75	168	672	238	175	2.2	2.8	9600	155	3.0	○	–	–	EETMOS3
		P88FP10SNK	100	88	352	178	-55 to 175	6.1	7.6	6100	108	3.0	○	■	○	EETMOS3
		P88FP10SN	100	88	352	178	175	6.1	7.6	6100	108	3.0	○	–	–	EETMOS3
		P126FP10SNK	100	126	504	238	175	3.8	4.8	9500	160	3.0	○	■	○	EETMOS3
		P126FP10SN	100	126	504	238	175	3.8	4.8	9500	160	3.0	○	–	–	EETMOS3
		P70FP12SNK	120	70	280	178	-55 to 175	8.9	11.1	6100	109	3.0	○	■	○	EETMOS3
		P70FP12SN	120	70	280	178	175	8.9	11.1	6100	109	3.0	○	–	–	EETMOS3
		P100FP12SNK	120	100	400	238	175	5.6	7.0	9600	164	3.0	○	■	○	EETMOS3
		P100FP12SN	120	100	400	238	175	5.6	7.0	9600	164	3.0	○	–	○	EETMOS3
TO-263SC – FZ-7p	H7	P211FZ4QMKA	40	211	752	178	175	1.10	1.38	8550	145	4.0	○	–	○	EETMOS4
		N P240FZ4QLA	40	240	720	178	-55 to 175	1.03	1.29	9675	171	2.0	○	–	–	EETMOS4
		N P240FZ4QNKA	40	240	720	178	-55 to 175	1.07	1.34	7915	133	3.0	○	○	○	EETMOS4

N : New product ■ : Please contact us.

THD (Through Hole Device)

Package JEDEC Code JEITA Code House Name	Fig.	Type No.	Absolute Maximum Ratings VDSS [V]	ID [A]	IDP [A]	PT [W]	Tch [℃]	Electrical Characteristics RDS(ON) (typ) [mΩ] VGS=10V	RDS(ON) (max) [mΩ] VGS=10V	Ciss (typ) [pF]	Qg (typ) [nC]	Vth (typ) [V]	Halogen free	Based on AEC-Q101	Automotive	Series
– SC-91 FTO-220AG	J8-2	P70F5EN	50	70	280	53	150	2.7	3.2	5500	100	3.0	–	–	–	EETMOS2
		P34F6EL	60	34	136	35	-55 to 150	9.0	11.0	1960	41	2.0	–	–	–	EETMOS2
		P42F6EN	60	42	168	40	150	6.7	8.4	2540	47	3.0	–	–	–	EETMOS2
		P55F6EN	60	55	220	44	150	4.4	5.5	4100	73	3.0	–	–	–	EETMOS2
		P86F6SN	60	86	344	58	150	2.4	3.0	9380	181	3.0	–	–	–	EETMOS3
		P66F7R5SNK	75	66	264	51	-55 to 150	4.0	5.0	6070	115	3.0	–	–	○	EETMOS3
		P66F7R5SN	75	66	264	51	150	4.0	5.0	6070	115	3.0	–	–	–	EETMOS3
		P70F7R5EN	75	70	280	53	150	3.8	4.8	5720	105	3.0	–	–	–	EETMOS2
		P82F7R5SN	75	82	328	58	-55 to 150	3.0	3.8	9600	168	3.0	–	–	–	EETMOS3
		P22F10SN	100	22	66	35	150	22	28	1700	34	3.0	–	–	–	EETMOS3
		P40F10SN	100	40	160	44	150	8.5	10.7	4500	92	3.0	–	–	–	EETMOS3
		P50F10SN	100	50	200	51	150	6.9	8.7	5880	114	3.0	–	–	–	EETMOS3
		P32F12SN	120	32	128	44	150	12.4	15.5	4540	92	3.0	–	–	–	EETMOS3
		P40F12SN	120	40	160	51	150	9.5	11.9	6000	117	3.0	–	–	–	EETMOS3
TO-220AB SC-46 FA	J5	P100FA7R5EN	75	100	400	140	150	4.2	5.0	5720	104	3.0	–	–	–	EETMOS2

POWER MOSFETs

The Hi-PotMOS series are MOSFETs with a high breakdown strength,and they are 100% screened using di/dt & avalanche testing.

Series	Feature
HP2 (Hi-PotMOS2)	High breakdown registance, Avalanche rated, di/dt inspection(all parts)
VX	Automotive qualified, Avalanche rated, di/dt inspection(all parts), High Breakdown registance

How to read

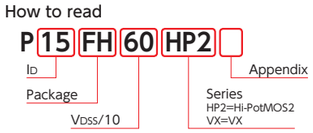

HP2・VX Series (Nch Single)

Surface Mount

Package	JEDEC Code JEITA Code House Name	Fig.	ID [A]	VDSS [V] 250/280/300	400	500/525	600	900	Remarks
10.0 × 6.6 × 2.3(mm)	TO-252AA – FB	G2-1	0.5				P0R5B60HP2		
			1			P1B52HP2			
			1.5		P1R5B40HP2				
			2				P2B60HP2F		
			2.5			P2R5B52HP2F			
			3	P3B28HP2					
			4		P4B40HP2		P4B60HP2F		
			5			P5B52HP2			
			6	P6B28HP2	P6B40HP2	P6B52HP2			
			8	P8B28HP2 P8B30HP2					
			9	P9B30HP2F	P9B40HP2				
			10	P10B28HP2					
9.5 × 6.6 × 2.65(mm)	TO-252AB similar SC-63 FE	G3-2	1					P1FE90VX3	
15.25 × 10.2 × 4.6(mm)	TO-263AB-1 – FH	H3	3					N P3FH90VX3	
			5					N P5FH90VX3	

N : New product

THD (Through Hole Device)

Package	JEDEC Code JEITA Code House Name	Fig.	ID [A]	VDSS [V] 280	400	500	600	900	Remarks
28.5 × 10.0 × 4.5(mm)	– SC-91 FTO-220AG	J8-2	3				P3F60HP2		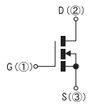
			4				P4F60HP2	N P4F90VX3	
			5			P5F50HP2 P5F50HP2F	P5F60HP2		
			6			P6F50HP2			
			7				P7F60HP2	N P7F90VX3	
			8	P8F28HP2		P8F50HP2			
			10			P10F50HP2	P10F60HP2		
			12				P12F60HP2		
			13	P13F28HP2		P13F50HP2			
			15			P15F50HP2	P15F60HP2 P15F60HP2F		
			17	P17F28HP2					
			20			P20F50HP2			
			21	P21F28HP2					
			26	P26F28HP2					
			36	P36F28HP2					
28.5 × 10.0 × 4.5(mm)	– SC-91 FTO-220A	J7-2	23		P23F40HP2FM				
41.0 × 16.0 × 5.0(mm)	TO-247AD – MTO-3PV	K7-4	30				P30W60HP2V		

N : New product

HP2・VX Series (Nch Single)

Surface Mount

Package JEDEC Code JEITA Code House Name	Fig.	Type No.	Absolute Maximum Ratings VDSS [V]	ID [A]	PT [W]	Tch [℃]	Electrical Characteristics RDS(ON) (typ) [Ω] VGS=10V	RDS(ON) (max) [Ω] VGS=10V	Ciss (typ) [pF]	Qg (typ) [nC]	Vth (typ) [V]	Body Diode trr (typ) [ns]	Halogen free	Based on AEC-Q101	Automotive	Series
TO-252AA – FB	G2-1	P3B28HP2	280	3	35	150	1.7	2.0	120	3.6	3.75	–	–	–	–	HP2
		P6B28HP2	280	6	35	150	0.66	0.85	240	5.7	3.75	–	–	–	–	HP2
		P8B28HP2	280	8	54	150	0.38	0.50	400	9.8	3.75	–	–	–	–	HP2
		P8B30HP2	300	8	54	150	0.42	0.50	400	9.8	3.75	–	–	–	–	HP2
		P9B30HP2F	300	9	54	-55 to 150	0.44	0.55	402	14.0	4.5 *1	72	–	–	–	HP2
		P10B28HP2	280	10	70	150	0.30	0.40	500	11.4	3.75	–	–	–	–	HP2
		P1R5B40HP2	400	1.5	35	150	4.2	5.0	120	3.9	3.75	–	–	–	–	HP2
		P4B40HP2	400	4	35	150	1.54	1.90	245	6.5	3.75	–	–	–	–	HP2
		P6B40HP2	400	6	54	150	0.84	1.05	400	10	3.75	–	–	–	–	HP2
		P9B40HP2	400	9	40	150	0.65	0.80	575	14.5	3.75	–	–	–	–	HP2
		P1B52HP2	525	1	35	150	6.0	7.2	125	4.3	3.75	–	–	–	–	HP2
		P2R5B52HP2F	525	2.5	35	150	2.5	3.2	240	6.7	3.25	52	–	–	–	HP2
		P5B52HP2	525	5	54	150	1.4	1.7	400	10.5	3.75	–	–	–	–	HP2
		P6B52HP2	525	6	70	150	1.10	1.35	520	15	3.75	–	–	–	–	HP2
		P0R5B60HP2	600	0.5	35	150	8.3	10.0	120	4.3	3.75	–	–	–	–	HP2
		P2B60HP2F	600	2	35	150	3.4	4.2	240	6.8	3.25	52	–	–	–	HP2
		P4B60HP2F	600	4	70	150	1.6	1.9	520	13	3.25	75	–	–	–	HP2
TO-252AB similar SC-63 FE	G3-2	P1FE90VX3	900	1	36	-55 to 150	9.5	14.0	193	10.8	3.5	–	–	○	○	VX
TO-263AB-1 – FH	H3	N P3FH90VX3	900	3	128	-55 to 150	2.8	3.4	600	22	4.0 *1	–	–	○	○	VX
		N P5FH90VX3	900	5	175	-55 to 150	1.2	1.5	1380	41	4.0 *1	–	–	○	○	VX

N : New product *1 : max. ■ : Please contact us.

THD (Through Hole Device)

Package JEDEC Code JEITA Code House Name	Fig.	Type No.	Absolute Maximum Ratings VDSS [V]	ID [A]	PT [W]	Tch [℃]	Electrical Characteristics RDS(ON) (typ) [Ω] VGS=10V	RDS(ON) (max) [Ω] VGS=10V	Ciss (typ) [pF]	Qg (typ) [nC]	Vth (typ) [V]	Body Diode trr (typ) [ns]	Halogen free	Based on AEC-Q101	Automotive	Series
– SC-91 FTO-220AG	J8-2	P8F28HP2	280	8	52.5	-55 to 150	0.38	0.5	400	9.8	3.75	–	–	–	–	HP2
		P13F28HP2	280	13	65	150	0.23	0.3	630	15	3.75	–	–	–	–	HP2
		P17F28HP2	280	17	79	150	0.17	0.23	830	19.5	3.75	–	–	–	–	HP2
		P21F28HP2	280	21	85	150	0.13	0.18	1000	20.5	3.75	–	–	–	○	HP2
		P26F28HP2	280	26	90	150	0.11	0.15	1200	24.5	3.75	–	–	–	–	HP2
		P36F28HP2	280	36	95	150	0.08	0.12	1730	35	3.75	–	–	–	–	HP2
		P5F50HP2	500	5	52.5	150	1.3	1.6	400	10.5	3.75	–	–	–	–	HP2
		P5F50HP2F	500	5	52.5	150	1.38	1.65	405	10.5	3.25	70	–	–	–	HP2
		P6F50HP2	500	6	62.5	150	1.00	1.25	500	12.5	3.75	–	–	–	–	HP2
		P8F50HP2	500	8	65	150	0.8	1.0	610	15	3.75	–	–	–	–	HP2
		P10F50HP2	500	10	79	-55 to 150	0.60	0.75	820	20	3.75	–	–	–	–	HP2
		P13F50HP2	500	13	85	150	0.48	0.60	1050	25	3.75	–	–	–	–	HP2
		P15F50HP2	500	15	90	150	0.4	0.5	1340	27	3.75	–	–	–	–	HP2
		P20F50HP2	500	20	95	150	0.29	0.36	1735	40	3.75	–	–	–	–	HP2
		P3F60HP2	600	3	52.5	150	1.92	2.30	400	10	3.75	–	–	–	–	HP2
		P4F60HP2	600	4	62.5	150	1.5	1.8	505	12.5	3.75	–	–	–	–	HP2
		P5F60HP2	600	5	65	150	1.17	1.40	615	15	3.75	–	–	–	–	HP2
		P7F60HP2	600	7	79	150	0.88	1.05	810	19	3.75	–	–	–	–	HP2
		P10F60HP2	600	10	85	150	0.67	0.80	1040	23	3.75	–	–	–	–	HP2
		P12F60HP2	600	12	90	150	0.56	0.67	1230	26.5	3.75	–	–	–	–	HP2
		P15F60HP2	600	15	95	-55 to 150	0.41	0.49	1750	37	3.75	–	–	–	–	HP2
		P15F60HP2F	600	15	95	-55 to 150	0.44	0.53	1720	34	3.25	88	–	–	–	HP2
		N P4F90VX3	900	4	79	150	2.8	3.6	595	21	4.0 *1	–	–	–	–	VX
		N P7F90VX3	900	7	95	150	1.2	1.7	1375	42	4.0 *1	–	–	–	–	VX
– SC-91 FTO-220A	J7-2	P23F40HP2FM	400	23	104	150	0.17	0.24	1620	40	3.25	68	–	–	–	HP2
TO-247AD – MTO-3PV	K7-4	P30W60HP2V	600	30	310	-55 to 150	0.185	0.23	3935	70	3.75	–	–	–	–	HP2

N : New product *1 : max.

POWER MODULES

Power Modules include combinations of various power semiconductors.
They are easy to design,reduce the number of components needed in the device, are suitable for device downsizing, and mitigate heat-dissipation concerns.
At Shindengen, a multitude of packages allow us to meet customer needs of MOSFET, diodes, and other products.
Semi customizable support and customizable package design support are available.

■ Transfer Type Package Sample

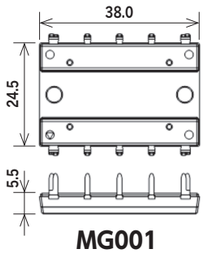

MG001

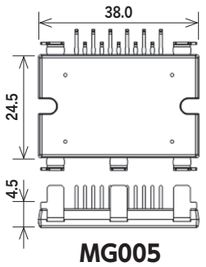

MG005

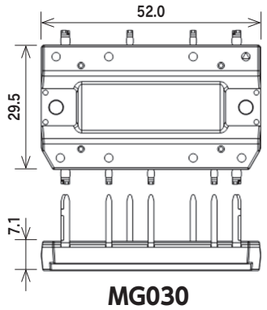

MG030

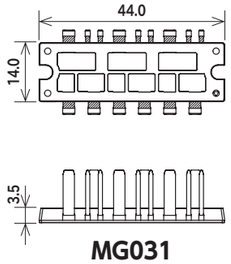

MG031

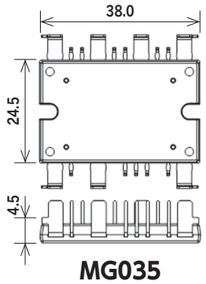

MG035

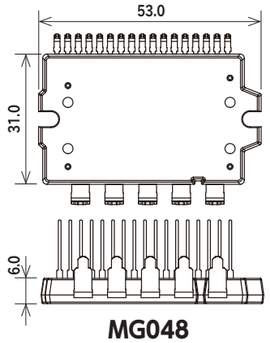

MG048

■ Potting Type Package Sample

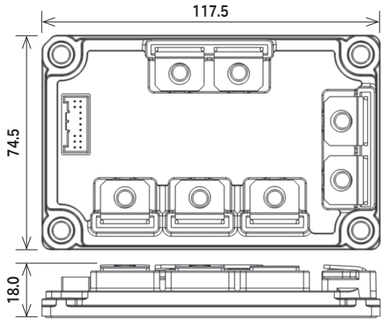

MG032

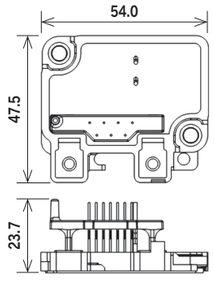

MG033

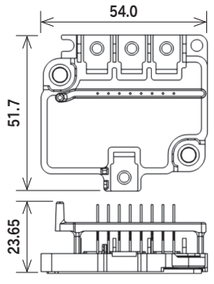

MG034

CB Module Series

Converter + Brake Modules

Package: JEDEC Code / JEITA Code / House Name	Fig.	Type No.	Converter Diode Absolute Maximum Ratings: VRRM [V]	IF (AV) [A]	Conditions Tc [℃]	Converter Diode Electric Characteristics: VF (max) [V]	Conditions IF [A]	Brake IGBT Absolute Maximum Ratings: VCES [V]	IC [A]	Brake IGBT Electric Characteristics: VCE (sat) (typ) [V]	Conditions IC [A]	Brake FRD Absolute Maximum Ratings: VRRM [V]	IF (AV) [A]	Conditions Tc [℃]	Brake FRD Electric Characteristics: VF (max) [V]	Conditions IF [A]	trr (max) [ns]	Halogen free	UL	Automotive
– – MG001	F4	N MG001AK028060A	600	20	137	1.05	7	600	28	1.70	28	600	3	137	1.65	3	50	○	UL	–
		N MG001AL030060A	600	30	136	1.05	10	600	30	1.5	30	600	3	137	1.65	3	50	○	UL	–

N : New product UL : UL recognized (UL File No. E142422)

■ Equivalent Circuit Schematic

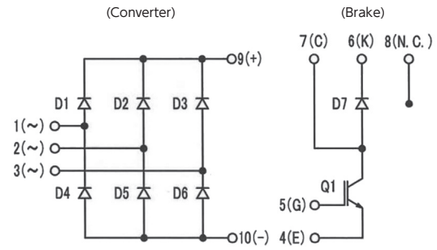

MG001

INV Module Series

Inverter Modules

Package: JEDEC Code / JEITA Code / House Name	Fig.	Type No.	Absolute Maximum Ratings: VDSS [V]	ID [A]	IDP [A]	PT [W]	Tch [℃]	Electrical Characteristics: RDS(ON) (typ) [mΩ] VGS=10V	RDS(ON) (max) [mΩ] VGS=10V	Ciss (typ) [pF]	Qg (typ) [nC]	Vth (typ) [V]	Rth(j-c) (max) [℃/W]	Halogen free	UL	Automotive
– – MG032	F6	N MG032A4207R5A	75	420	840	500	150	–	0.98	80120	505	3.0	0.25	–	–	○
		N MG032B420010A	100	420	840	500	150	0.99	1.37	91800	500	3.0	0.25	–	–	○
– – MG031	F5	N MG031B090004A	40	90	360	125	175	2.34	3.2	4180	76	2.0	1.2	○	–	○
		★ MG031E120004A	40	120	480	104	150	2.5	3.1	TBD	TBD	3.0	1.2	○	–	■
		N MG031G148004A	40	148	592	154	175	1.75	2.2	5330	96	3.0	0.97	○	–	○
		★ MG031L080006A	60	80	320	104	150	4.5	5.6	3390	58	3.0	1.2	○	–	■
		★ MG031N110006A	60	110	440	128	150	3.0	3.8	5430	89	3.0	0.97	○	–	■
		★ MG031MC148004A	40	148	592	128	150	1.75	2.2	5330	96	3.0	0.97	○	–	■
		★ MG031MD110006A	60	110	440	128	150	3.0	3.8	5430	89	3.0	0.97	○	–	■
– – MG048	F8	N MG048A150004A	40	150	600	147	150	2.1	2.7	5900	111	3.0	0.85	○	–	■
		N MG048B100006A	60	100	400	147	150	2.92	3.65	8100	129	3.0	0.85	○	–	■

N : New product ★ : Under development ■ : Please contact us.

■ Equivalent Circuit Schematic

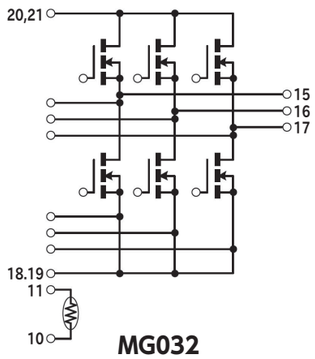

MG032

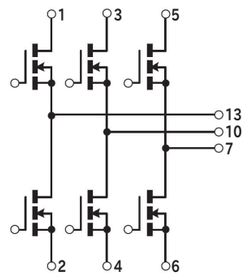

MG031

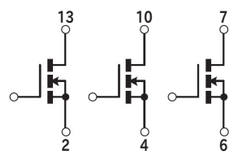

MG031
(MG031MC148004A
MG031MD110006A)

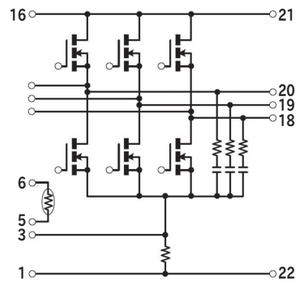

MG048

POWER ICs

Line up

IC for LED Lighting

- LED Lighting
  - Insulated LLC Mode — MCZ Series
  - Critical Current Mode — MV Series

IC for Power Supply

- LLC Current Resonant Mode
  - MCZ5216ST
  - MCZ5211ST
  - MCZ5208SG
  - MCZ5207SG
  - MCZ5203SE
  - with PFC control
    - MCZ5209SN
    - MCZ5205SE
- Driver IC
  - MCZ5607SC
  - MCZ5606SC
  - MCZ5601SC
- Quasi-Resonant Mode — IC — MS Series
- for PFC circuit — MH Series

Ideal Diode IC

- MF2003SV
- MF2007SW

IC for LED Lighting

Current Mode Power Supply ICs for LED Lighting : MV Series

■ Outline The MV series has a specialized function for LED lighting with PWM & Linear dimming that operates critical current mode without auxiliary winding.
On and off width modulation function allows for smooth deep dimming of 1% or less.

MV Series

Critical Current Mode Power Supply ICs for LED Lighting

Package		Type No.	HV Startup	Vcc [V]	Output	ON/OFF	Built-in Regulator Voltage [V]	Linear Dimming	PWM Dimming	Halogen free	Automotive
JEDEC Code / JEITA Code / House Name	Fig.										
– / – / SOP8J	L2	MV1001SC	Yes	9 to 16	1ch	–	–	Yes	Yes	–	–
		MV1002SC	No							–	–
		MV1011SC	Yes			Cont. by REF Voltage				–	–
		MV1012SC	No							–	–
– / – / SOP16	L5	MV2002SG	No	10 to 16	2ch		3.3			–	–
		MV2052SG	No				5			–	–

POWER ICs

IC for Power Supply

LLC Current Resonant Mode Controller ICs for Bridge Converter : MCZ Series

■ Outline The MCZ series is an advanced symmetric LLC current resonant mode controller for bridge converters.
Symmetric LLC resonant converter applications are greatly expanding due to their extremely high efficiency and low noise characteristics.

High/Low Side Driver IC

■ Outline A driving IC for MOSFET and IGBT power devices.
With built-in high-withstand voltage components, it can be used for a variety of uses such as inverter and power supply, etc.

Low Power Standby Quasi-Resonant Power Supply ICs : MS Series

■ Outline The MS series consumes much less power in standby mode than conventional MR series.
The ICs incorporate various functions to make it more user-friendly and easier to design a power supply with fewer external components.

PFC ICs : MH Series

■ Outline The MH series is a PFC circuit control IC which enables multistage interleave.
An efficient, high power operation is possible by utilizing a follower IC composed of multistage interleave and a leader IC that can be used alone.

Ideal Diode IC

Ideal Diode IC V-Diode™ MF Series

■ Outline This is an ideal diode IC with a built-in reverse connection and reverse current protection it is used for electronic units with batteries as input sources.
By using a built-in or a separate MOSFET to control the IC, it allows reducing the size of the circuit board as well as lowering loss and increasing heat dissipation.

MCZ Series

LLC Current Resonant Mode Controller ICs for Bridge Converter

Package: JEDEC Code / JEITA Code / House Name	Fig.	Type No.	Type	HV Startup	High-side Drive	Vcc (max) [V]	Vin Sensing	Burst Mode	Maximum Frequency [kHz]	X-cap. discharge	Capacitive Mode Protection	Over Voltage Protection	Over Current Protection	Halogen free	Automotive
– / – / SOP18	L6	N MCZ5216ST	LLC Current Resinant Mode	Yes	Yes	35	Yes	Yes	500	Yes	Yes	Latch	Timer Latch	○	–
		N MCZ5211ST	LLC Current Resinant Mode	Yes				Yes	500	No				○	–
– / – / SOP24	L8	MCZ5209SN	LLC Current Resinant Mode with PFC Control	Yes				Yes	300	No				○	–
– / – / SOP16	L5	MCZ5207SG	LLC Current Resinant Mode	No				Yes	300	No				–	–
		MCZ5208SG	LLC Current Resinant Mode	No				Yes	500	No				○	–
– / – / SOP22	L7	MCZ5205SE	LLC Current Resinant Mode with PFC Control	No				No	300	No				–	–
– / – / SOP22	L7	MCZ5203SE	LLC Current Resinant Mode	No				No	300	No		–		–	–

N : New product

High/Low Side Driver ICs

Package: JEDEC Code / JEITA Code / House Name	Fig.	Type No.	Output	High-side Floating Supply Voltage [V]	Vcc (max) [V]	Input/ Output Channel	Vcc_UVLO [V]	VBS_UVLO [V]	Source [mA]	Sink [mA]	Halogen free	Automotive
– / – / SOP8J	L2	★ MCZ5607SC	High-side/ Low-side	622	22	2/2	8.2 to 8.9	8.2 to 8.9	220	450	Not identified	–
		★ MCZ5606SC		622	22	2/2	8.2 to 8.9	8.2 to 8.9	220	450	Not identified	–
		N MCZ5601SC		600	22	2/2	8.2 to 9.0	7.2 to 8.0	400	400	○	–

N : New product ★ : Under development

MS Series

Low Power Standby Quasi-Resonant Power Supply ICs

Package: JEDEC Code / JEITA Code / House Name	Fig.	Type No.	Vin [V]	Vcc [V]	Over Voltage Protection	Over Current Protection	Stand-by Operation	Bottom Skip	Halogen free	Automotive
– / – / SOP8/7J	L3	★ MS1007SH	95 to 450	11 to 21	Auto restart	Auto restart	Auto Burst Mode	1 skip	–	–
		MS1004SH		11 to 24	Vcc Latch	Timer Latch 2sec. (typ)	Auto Burst Mode/ S-Stby Mode	2 skip	–	–
		MS1003SH						1 skip	–	–
– / – / SOP14	L4	MS1006SK					Auto Burst Mode/ UT-Stby Mode	2 skip	–	–
		MS1005SK						1 skip	–	–

★ : Under development

MH Series

PFC ICs

Package: JEDEC Code / JEITA Code / House Name	Fig.	Type No.	Type	Operation Mode	Vin Sensing	Vcc [V]	Zero Current Detection	Diodes Short Protection	FB Open Short Protection	Over Voltage Protection	Halogen free	Automotive
– / – / SOP8J	L2	MH2501SC	Critical Current Mode	Leader	Unnecessary	13 to 23	Auxiliary Winding	Yes	Yes	Yes	–	–
		MH2511SC	Synchronizes with Leader IC	Follower		11 to 23	–	No	No	No	–	–

MF Series

Ideal Diode IC

Package: JEDEC Code / JEITA Code / House Name	Fig.	Type No.	Featured Type	Operating Voltage [V]	Reverse Connection Protection	Reverse Current Prevention	Ron(typ.) [mΩ]	Quiescent Current/ Shutdown Supply Current	Halogen free	Automotive
– / – / WSON8	L9	★ MF2003SV	Built-in Pch MOSFET	2.5 to 40	Yes	Yes	57	Quiescent Current = 3μA	Not identified	○
– / – / TSSOP10	L10	★ MF2007SW	Driver IC for Separate Nch MOSFET	3.5 to 70	Yes	Yes	–	Shutdown Supply Current = 10μA	Not identified	○

★ : Under development

PACKAGE LIST

	1	2	3	4	5		6	7	8	9	10
A	A1 Package:AX057	A2 Package:AX06	A3 Package:AX06	A4 Package:AX078	A5 Package:AX10		A6 Package:AX10	A7 Package:AX14			
B	B1 Package:DO-219AB similar G1F	B2 Package:DO-219AA M1F	B3 Package:DO-214AC 1F	B4 Package:DO-214AC 1F	B5 Package:SC-110B CE		B6 Package:DO-214AA similar M2F	B7 Package:DO-214AA similar M2F	B8 Package:DO-214AA similar M2F	B9 Package:2F	B10 Package:2F
C	C1 Package:SOPA-4	C2 Package:TO-269AA 1Z(SMD)	C3 Package:1Z(DIP)	C4 Package:1N(SMD)	C5 Package:1N(DIP)		C6 Package:1NA(SMD)	C7 Package:1NA(DIP)	C8 Package:1W(SMD)	C9 Package:1W(DIP)	
D	D1 Package:D3K	D2 Package:2S	D3 Package:3S	D4 Package:5S	D5 Package:JB		D6 Package:JA	D7 Package:TSB(4pin),JC(4pin)	D8 Package:TSB(5pin),JC(5pin)	D9 Package:JF	D10 Package:JH
E	E1 Package:MCP	E2 Package:D30VC	E3 Package:S2VB	E4 Package:S4VB	E5 Package:S5VB		E6 Package:S10VB	E7 Package:S15VB	E8 Package:S25VB	E9 Package:S50VB	E10 Package:S3WB

	11	12	13	14	15
E	E11 Package:S10WB	E12 Package:S15WB	E13 Package:S20WB	E14 Package:SVTA	E15 Package:SVT

PACKAGE LIST

	1	2	3	4	5		6	7	8	9	10
F	F1 Package:Module 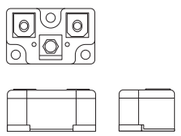	F2 Package:Module 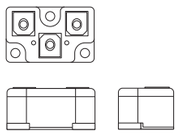	F3 Package:Module 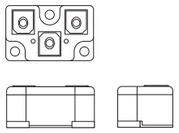	F4 Package:MG001 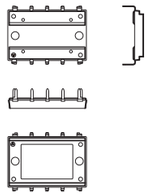	F5 Package:MG031 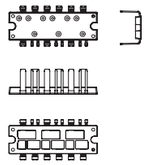		F6 Package:MG032 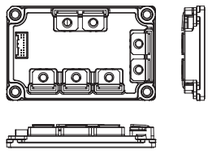	F7 Package:MG038 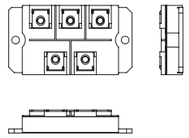	F8 Package:MG048 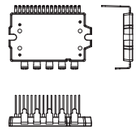	F9 Package:MG060 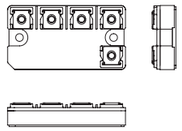	F10 Package:MG061 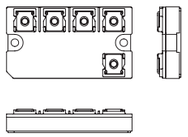
G	G1 Package:SC-63 E-pack 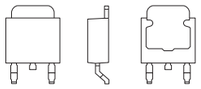	G2 Package:TO-252AA FB 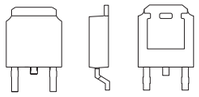	G3 Package:TO-252AB similar FE 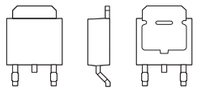	G4 Package:DO-277A similar FY 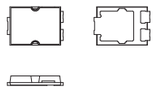	G5 Package:TO-252AA similar FR 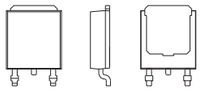		G6 Package:LA 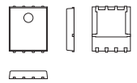	G7 Package:MO-235B similar LF 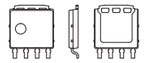			
H	H1 Package:SC-83 similar STO-220 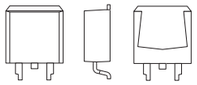	H2 Package:SC-83 similar FD 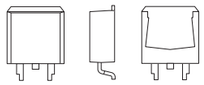	H3 Package:TO-263AB-1 FH 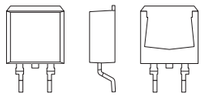	H4 Package:TO-263AB FG 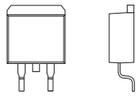	H5 Package:SC-83 similar FP 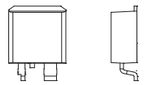		H6 Package:TO-263AB FZ 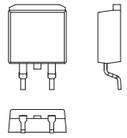	H7 Package:TO-263-SC FZ-7p 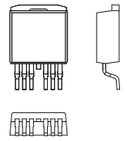			
J	J1 Package:SC-91A FTO-220(2pin) 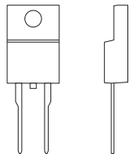	J2 Package:SC-91 FTO-220A(2pin) 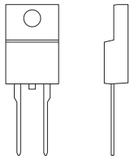	J3 Package:SC-91 FTO-220AG(2pin) 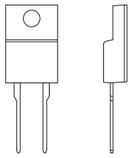	J4 Package:SC-91 FTO-220G(2pin) 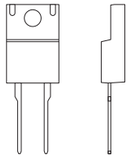	J5 Package:TO-220AB FA 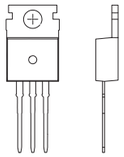		J6 Package:SC-91A FTO-220(3pin) 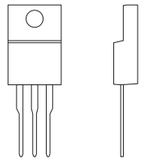	J7 Package:SC-91 FTO-220A(3pin) 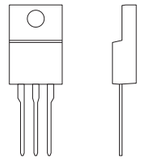	J8 Package:SC-91 FTO-220AG(3pin) 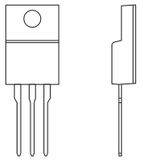	J9 Package:SC-91 FTO-220G(3pin) 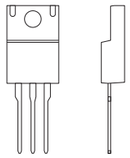	
K	K1 Package:SC-93 ITO-3P(2pin) 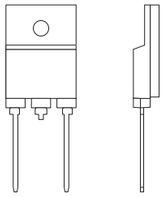	K2 Package:TO-247AD MTO-3PT(2pin) 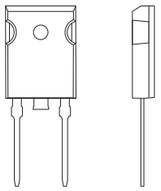	K3 Package:SC-93 ITO-3P(3pin) 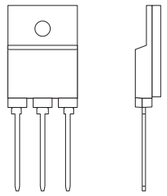	K4 Package:TO-247AD MTO-3P(3pin) 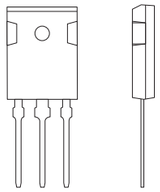	K5 Package:TO-247AD MTO-3PT(3pin) 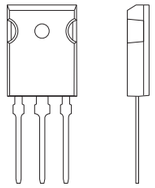		K6 Package:TO-247AD MTO-3PV 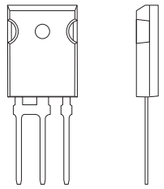	K7 Package:TO-247AD MTO-3PV 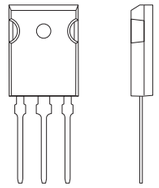			
L	L1 Package:SOP8 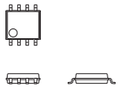	L2 Package:SOP8J 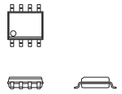	L3 Package:SOP8/7J 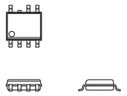	L4 Package:SOP14 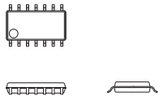	L5 Package:SOP16 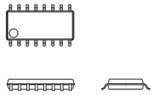		L6 Package:SOP18 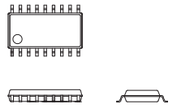	L7 Package:SOP22 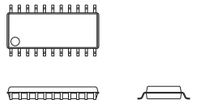	L8 Package:SOP24 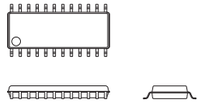	L9 Package:WSON8 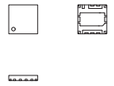	L10 Package:TSSOP10 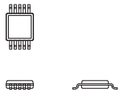

OUTLINE DIMENSIONS

[*Unit:mm*]

A1 Package: AX057

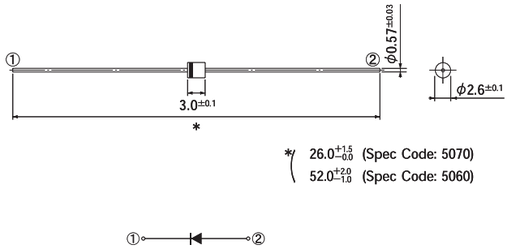

A2 Package: AX06

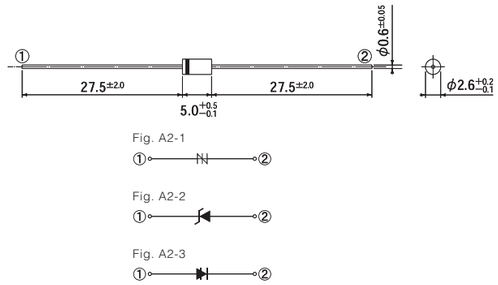

A3 Package: AX06

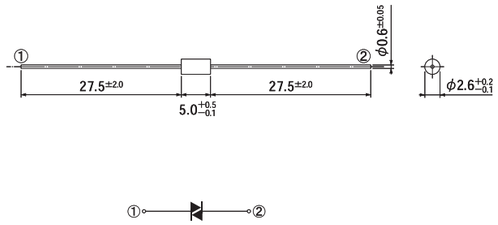

A4 Package: AX078

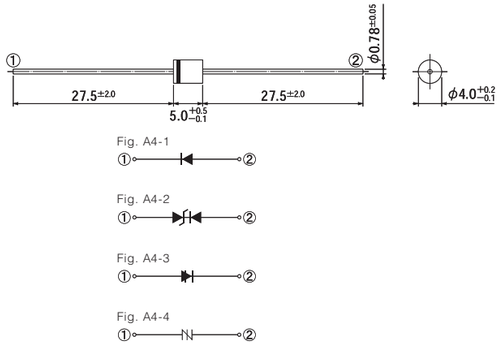

A5 Package: AX10

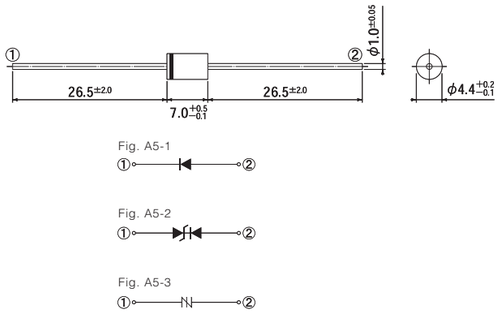

A6 Package: AX10

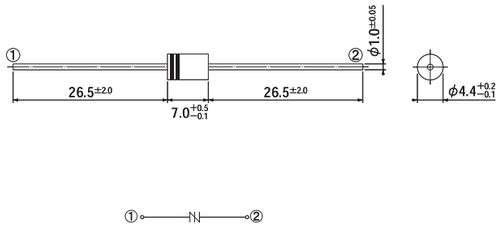

[*Unit:mm*]

A7 Package: AX14

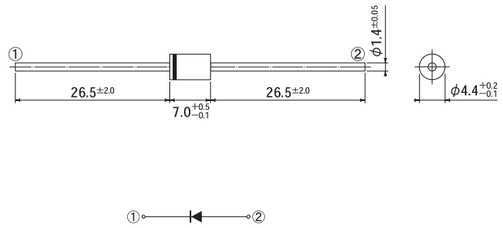

B1 Package: DO-219AB similar G1F

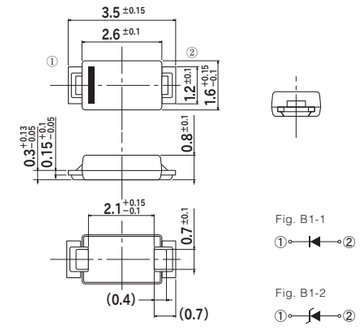

B2 Package: DO-219AA similar M1F

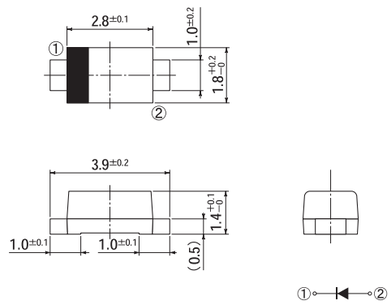

B3 Package: DO-214AC 1F

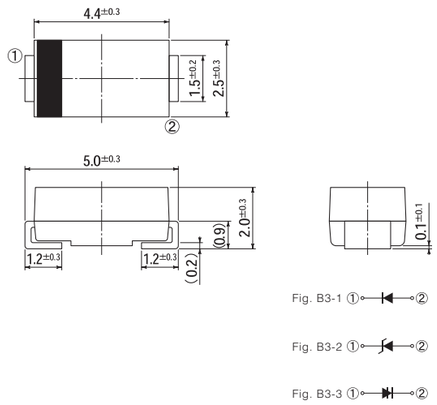

B4 Package: DO-214AC 1F

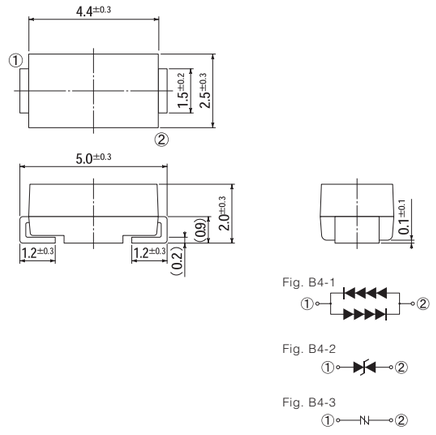

B5 Package: SC-110B CE

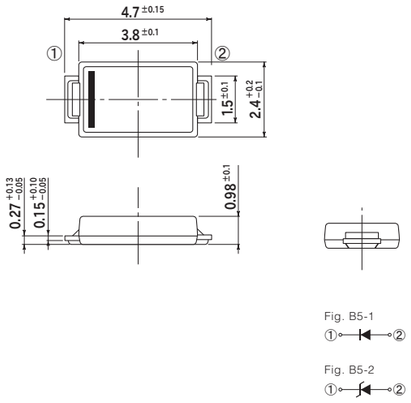

OUTLINE DIMENSIONS

[*Unit:mm*]

B6 Package: DO-214AA similar M2F

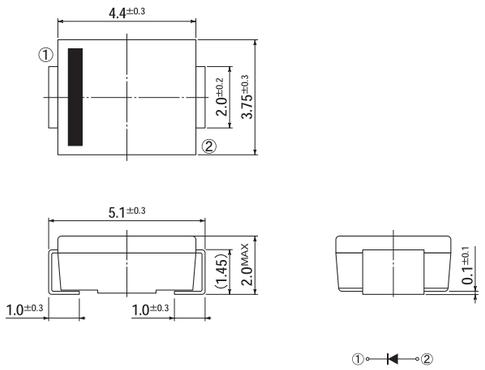

B7 Package: DO-214AA similar M2F

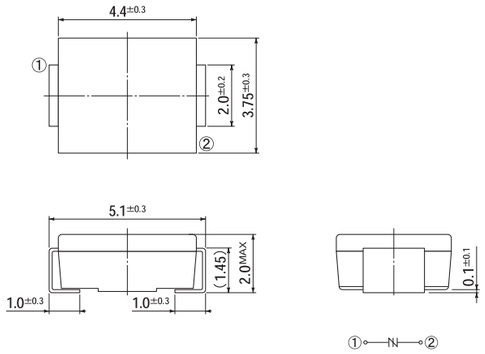

B8 Package: DO-214AA similar M2F

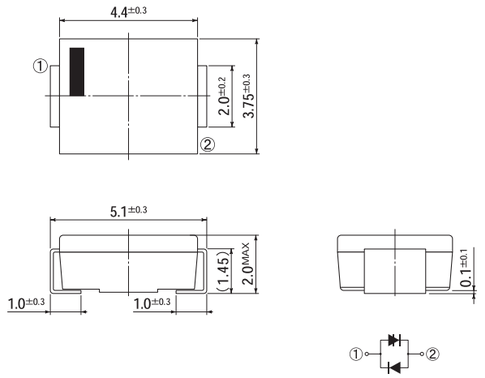

B9 Package: 2F

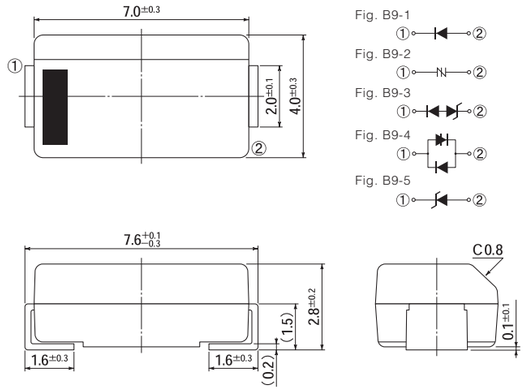

B10 Package: 2F

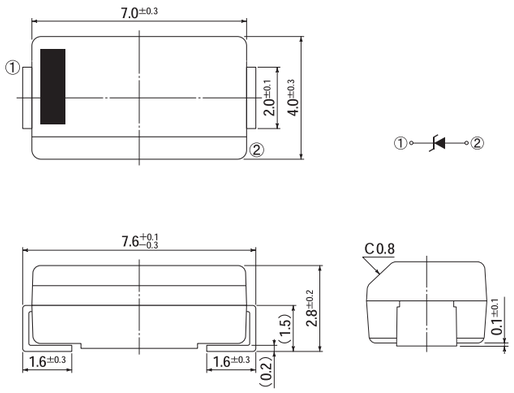

[*Unit:mm*]

C1 Package: SOPA-4

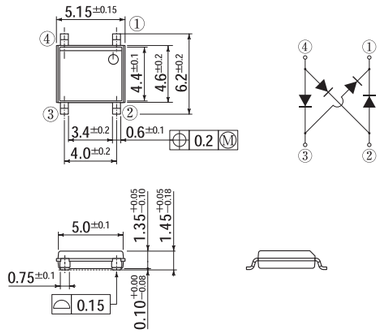

C2 Package: TO-269AA 1Z (SMD)

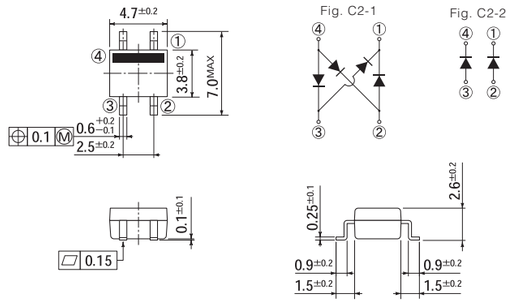

C3 Package: 1Z (DIP)

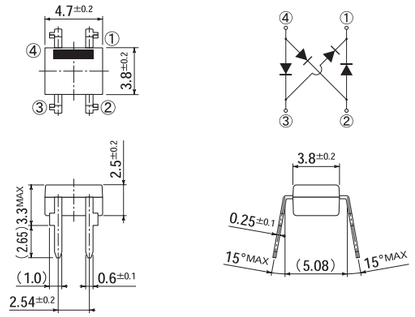

C4 Package: 1N (SMD)

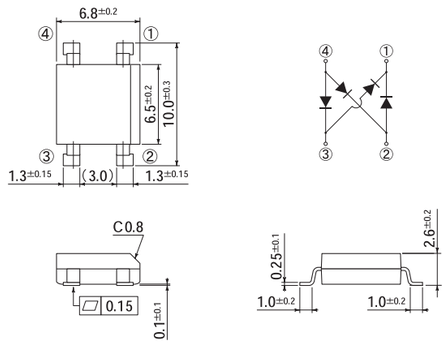

C5 Package: 1N (DIP)

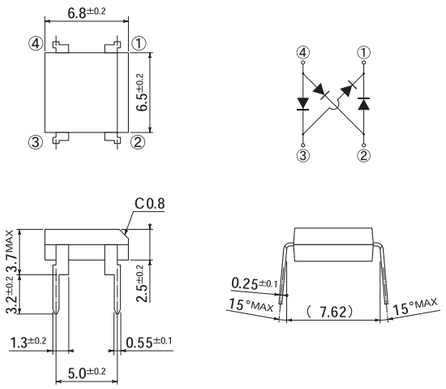

C6 Package: 1NA (SMD)

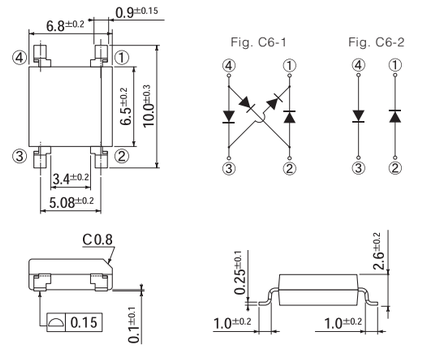

OUTLINE DIMENSIONS

[*Unit:mm*]

C7 Package: 1NA (DIP)

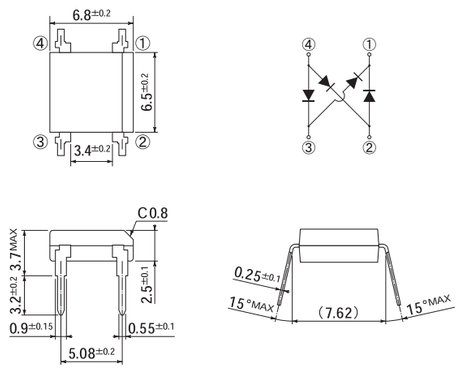

C8 Package: 1W (SMD)

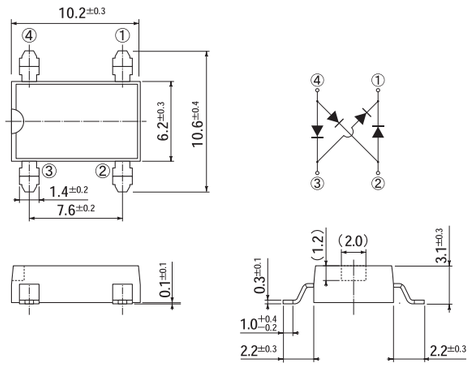

C9 Package: 1W (DIP)

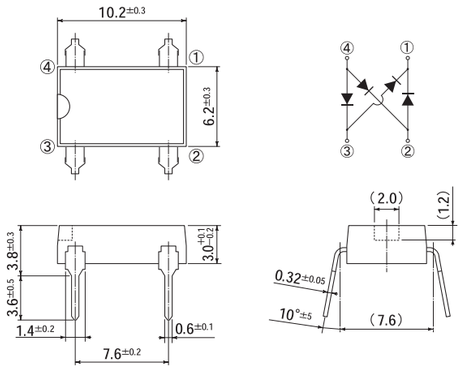

[*Unit:mm*]

D1 Package: D3K

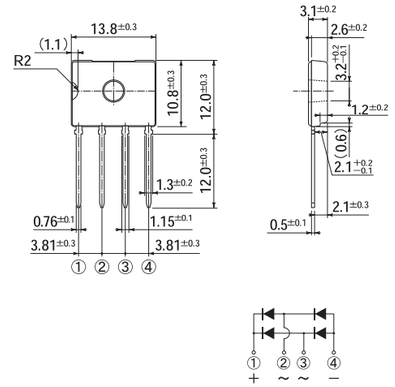

D2 Package: 2S

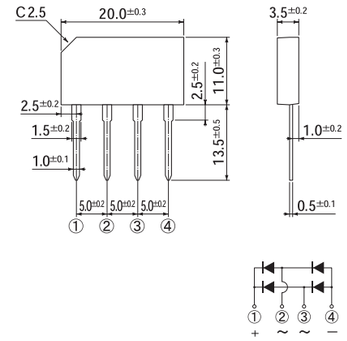

D3 Package: 3S

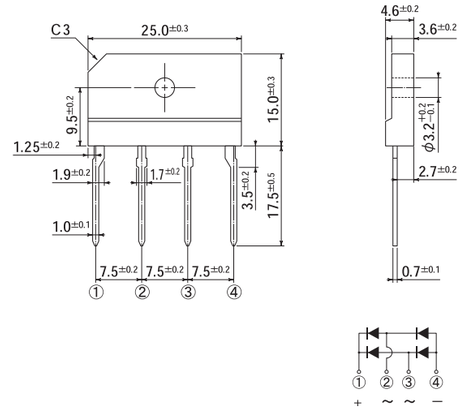

D4 Package: 5S

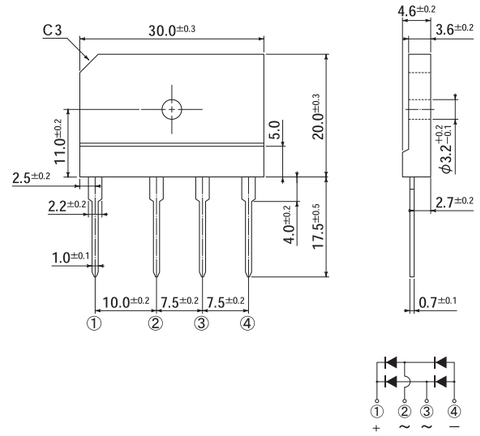

D5 Package: JB

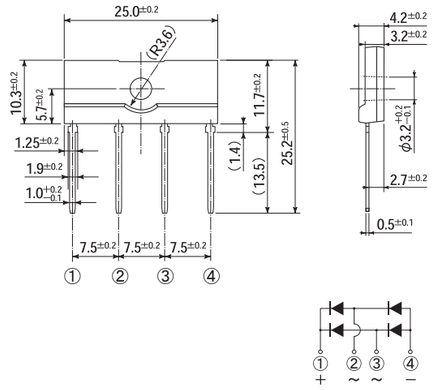

D6 Package: JA

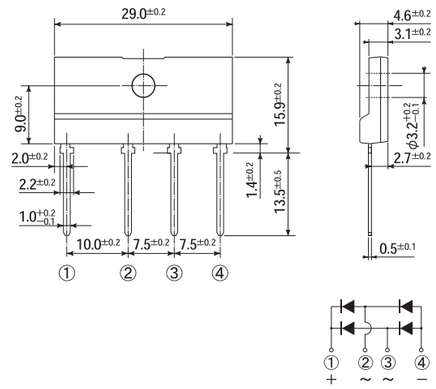

OUTLINE DIMENSIONS

[*Unit:mm*]

D7 Package: TSB (4pin), JC (4pin)

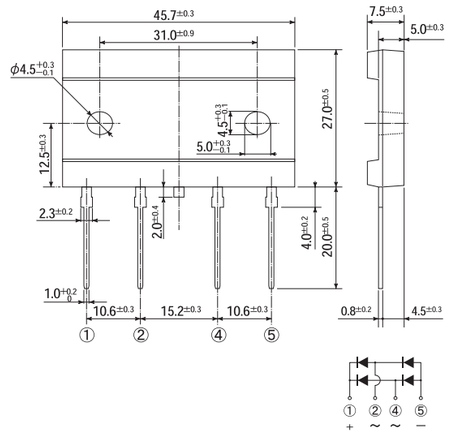

D8 Package: TSB (5pin), JC (5pin)

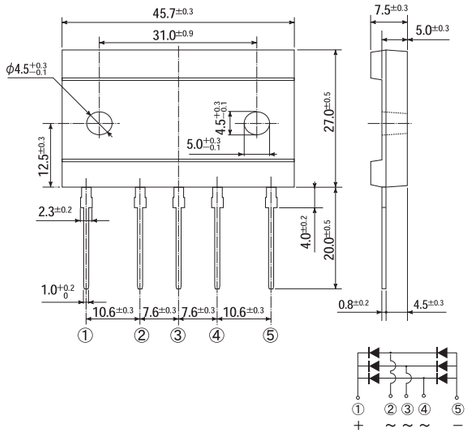

D9 Package: JF

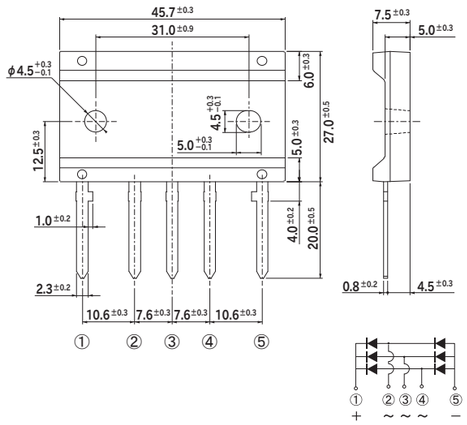

D10 Package: JH

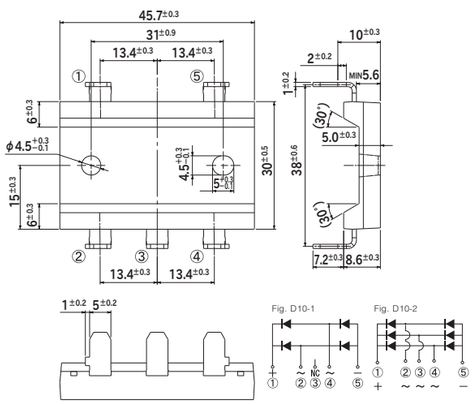

[*Unit:mm*]

E1 Package: MCP

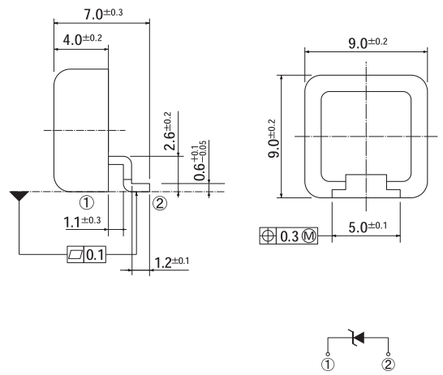

E2 Package: D30VC

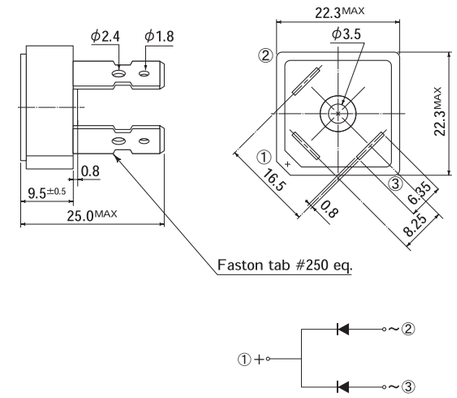

E3 Package: S2VB

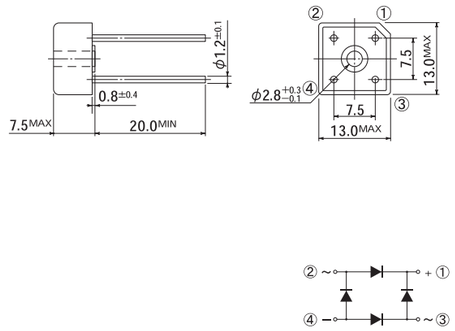

E4 Package: S4VB

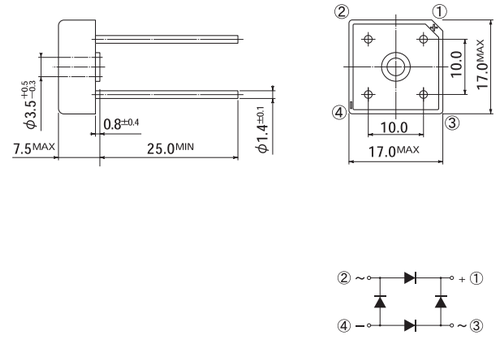

E5 Package: S5VB

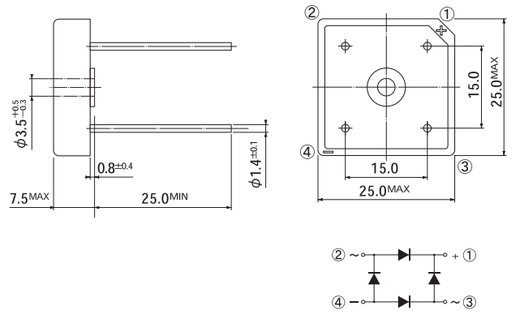

E6 Package: S10VB

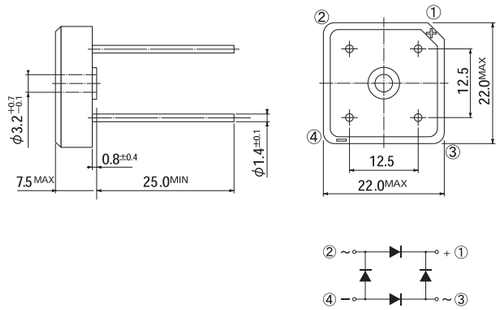

OUTLINE DIMENSIONS

[Unit:mm]

E7 Package: S15VB

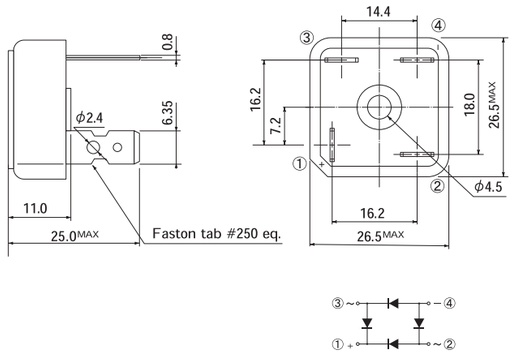

E8 Package: S25VB

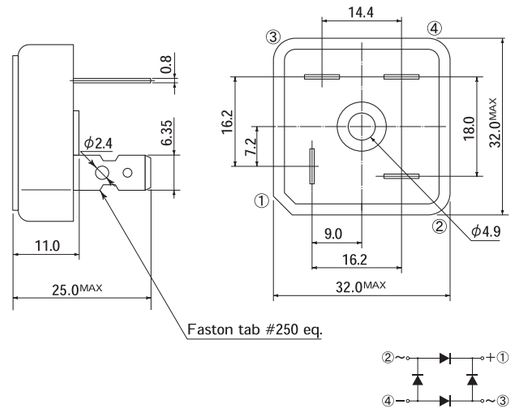

E9 Package: S50VB

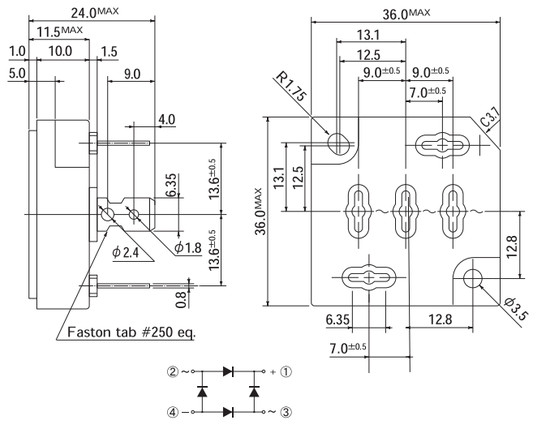

E10 Package: S3WB

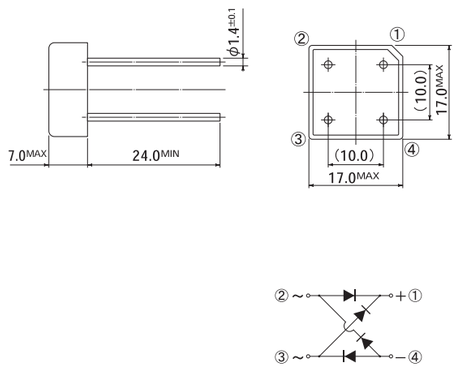

E11 Package: S10WB

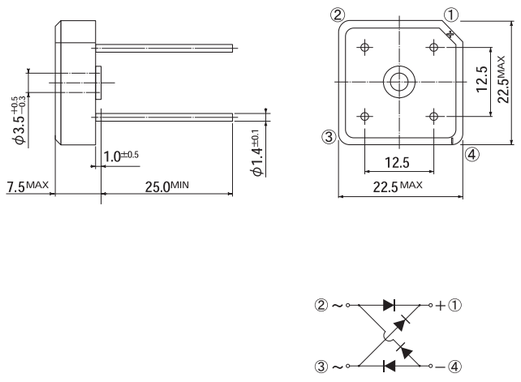

E12 Package: S15WB

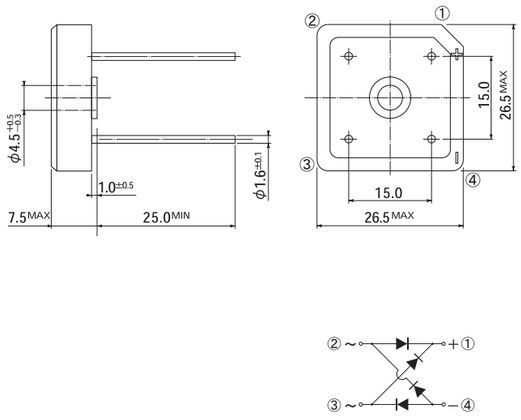

[Unit:mm]

E13 Package: S20WB

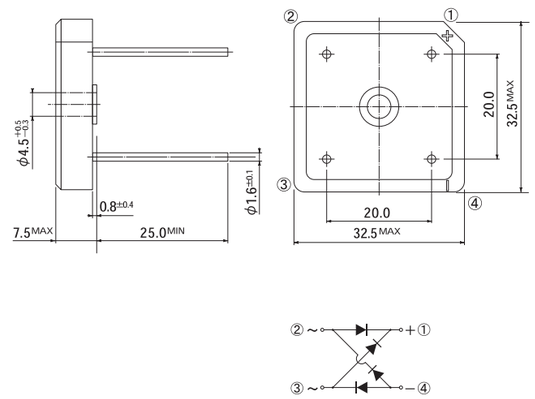

E14 Package: SVTA

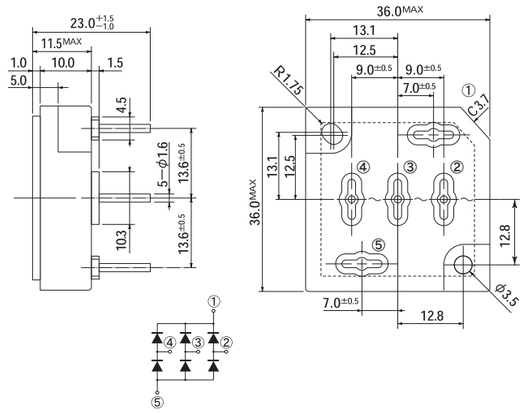

E15 Package: SVT

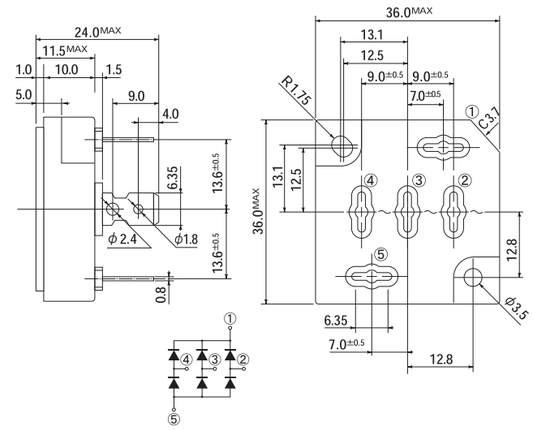

F1 Package: Module

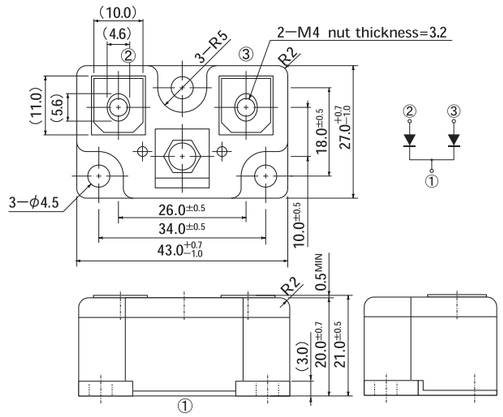

F2 Package: Module

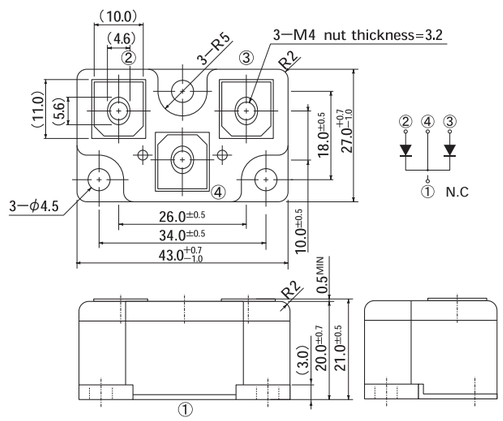

F3 Package: Module

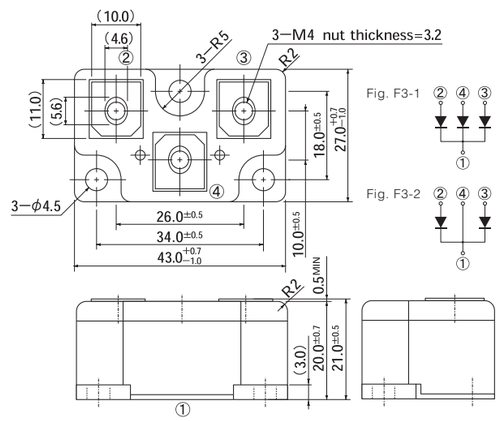

OUTLINE DIMENSIONS

[*Unit:mm*]

F4 Package: MG001

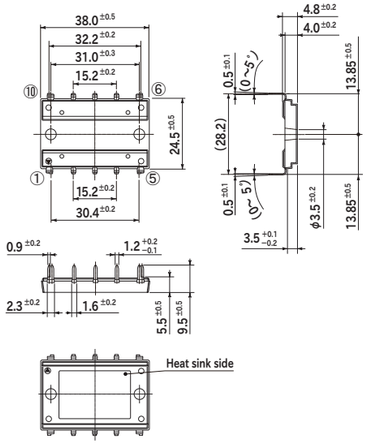

F5 Package: MG031

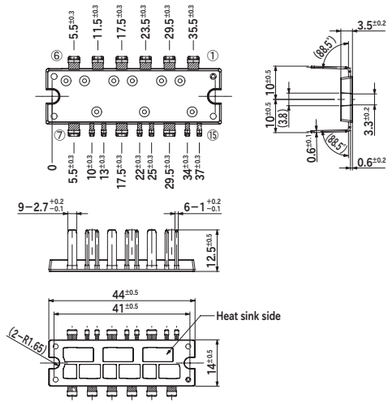

F6 Package: MG032

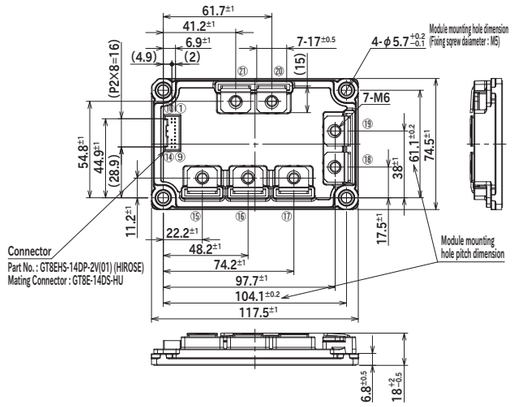

F7 Package: MG038

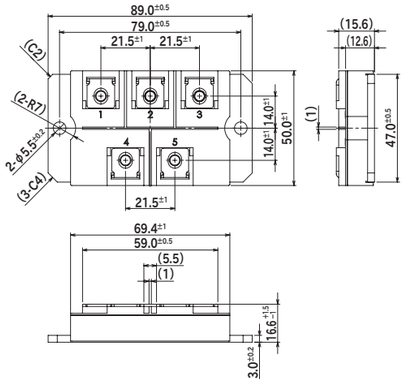

F8 Package: MG048

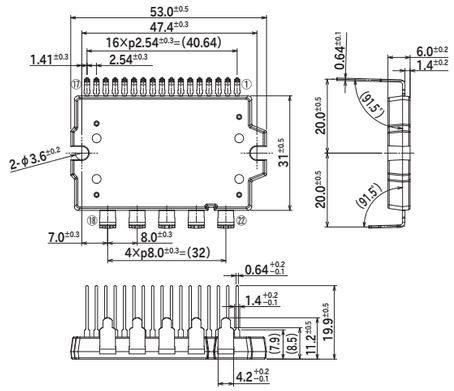

F9 Package: MG060

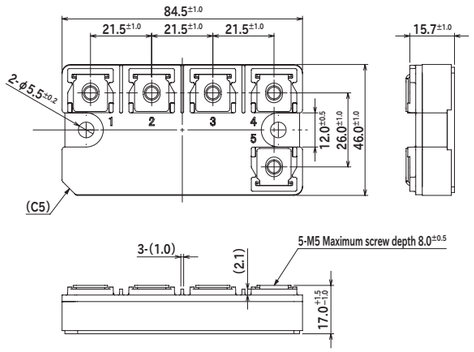

[*Unit:mm*]

F10 Package: MG061

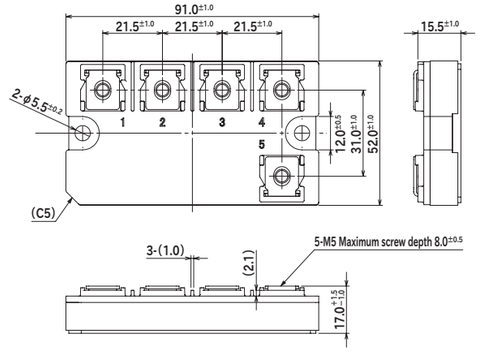

G1 Package: SC-63 E-pack

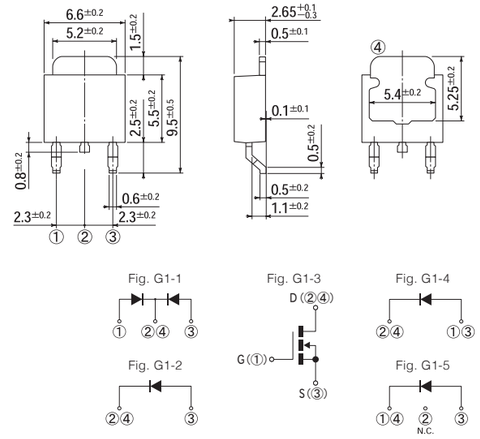

G2 Package: TO-252AA FB

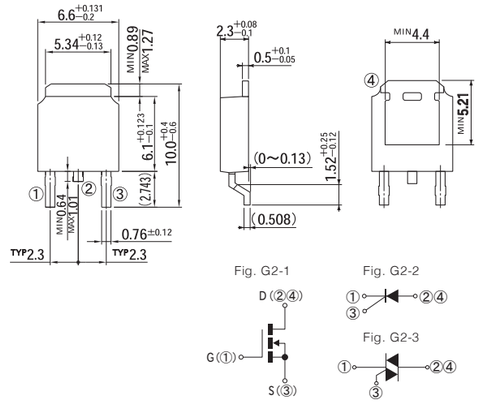

G3 Package: TO-252AB similar FE

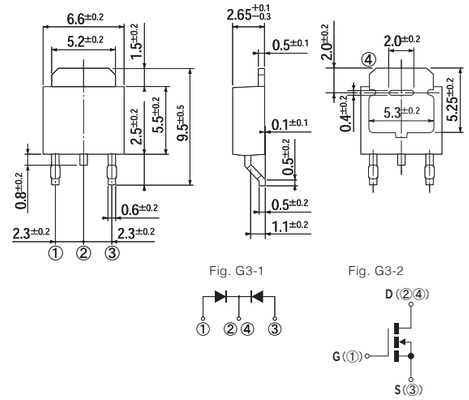

G4 Package: TO-277A similar FY

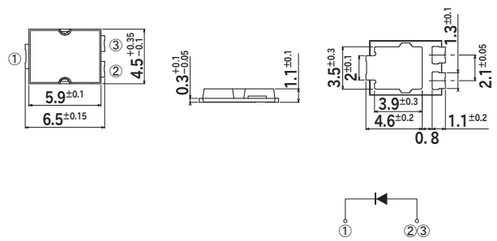

G5 Package: TO-252AA similar FR

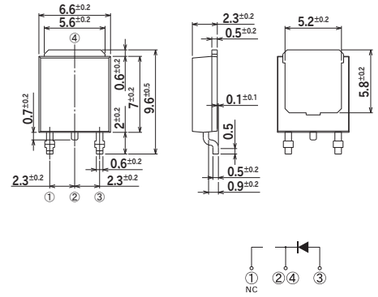

OUTLINE DIMENSIONS

[Unit:mm]

G6 Package: LA

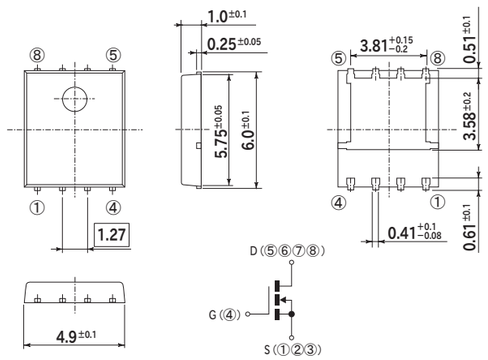

G7 Package: MO-235B similar

LF

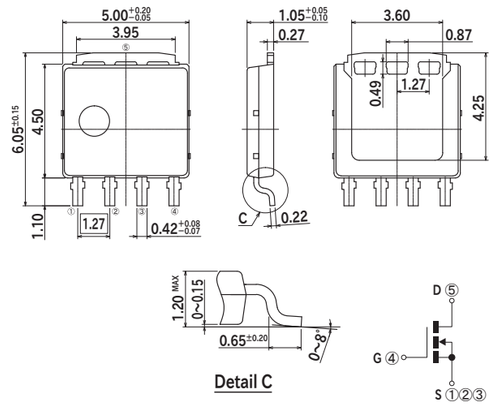

H5 Package: SC-83 similar

FP

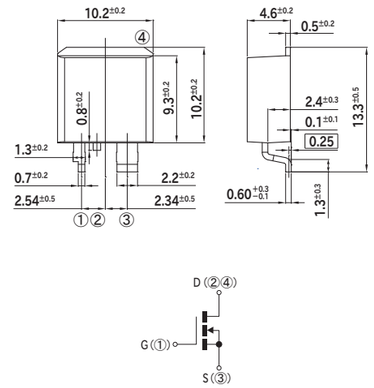

H6 Package: TO-263AB

FZ

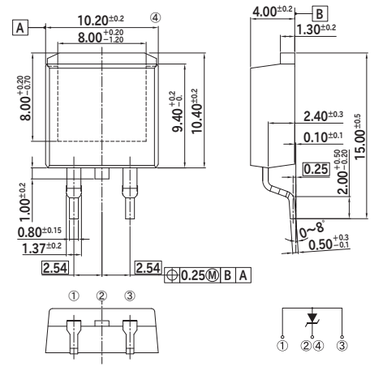

H1 Package: SC-83 similar

STO-220

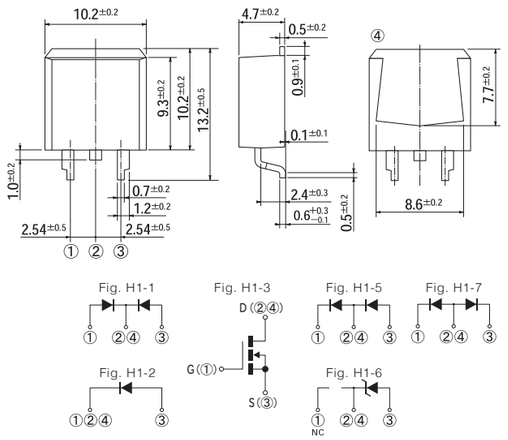

H2 Package: SC-83 similar

FD

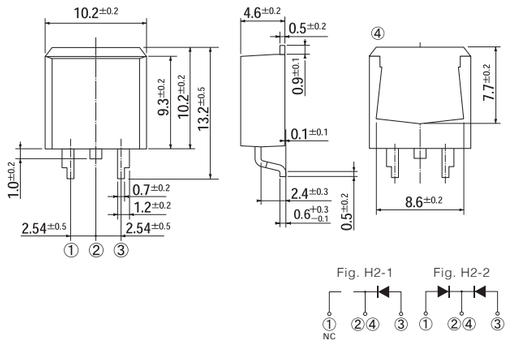

H7 Package: TO-263SC

FZ-7p

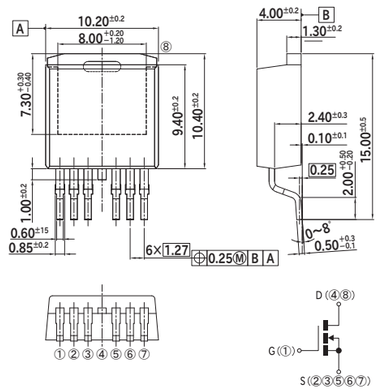

J1 Package: SC-91A

FTO-220 (2pin)

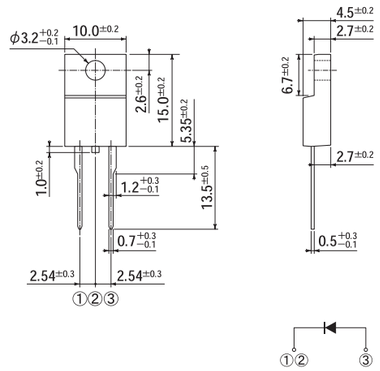

H3 Package: TO-263AB-1

FH

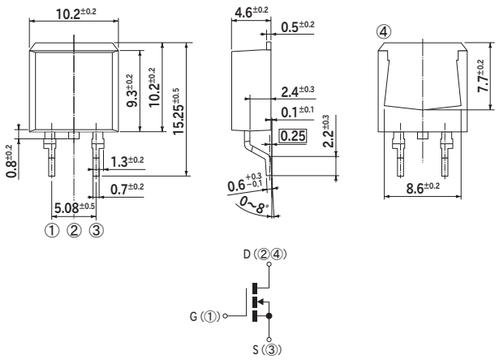

H4 Package: TO-263AB

FG

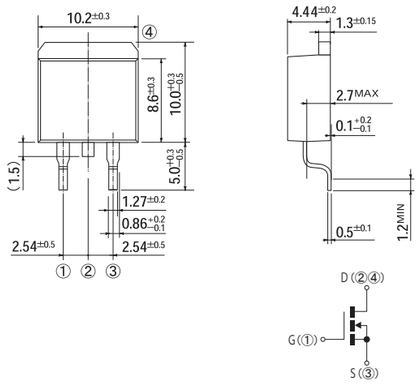

J2 Package: SC-91

FTO-220A (2pin)

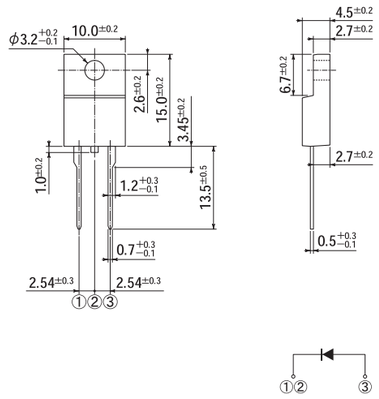

J3 Package: SC-91

FTO-220AG (2pin)

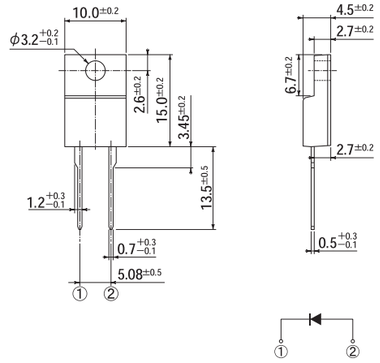

OUTLINE DIMENSIONS

[*Unit:mm*]

J4 Package: SC-91 FTO-220G (2pin)

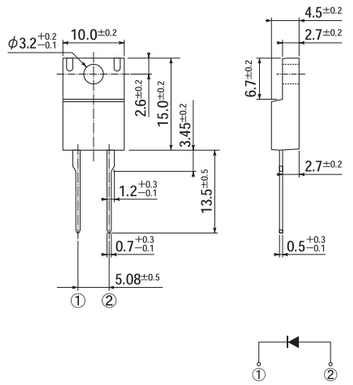

J5 Package: TO-220AB FA

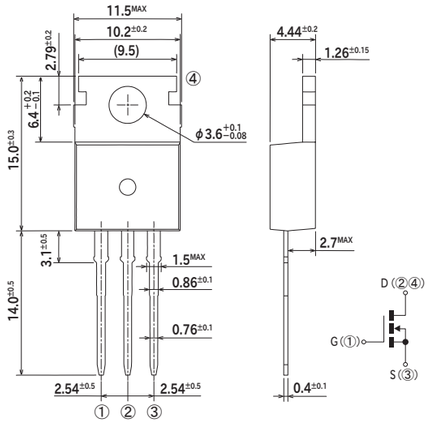

J6 Package: SC-91A FTO-220 (3pin)

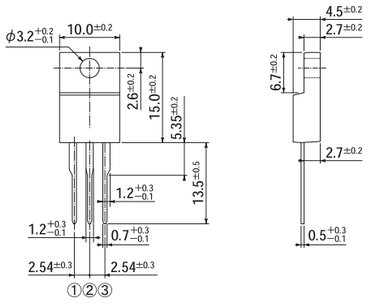

Fig. J6-1

Fig. J6-2

Fig. J6-3

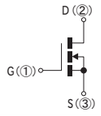

J7 Package: SC-91 FTO-220A (3pin)

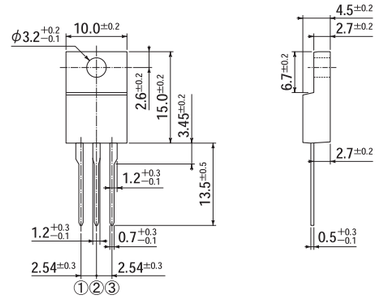

Fig. J7-1

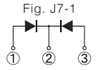

Fig. J7-2

Fig. J7-3

J8 Package: SC-91 FTO-220AG (3pin)

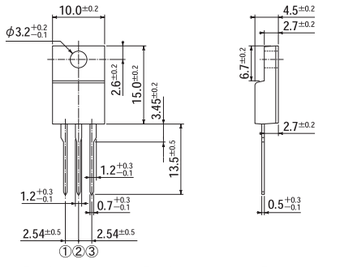

Fig. J8-1

Fig. J8-2

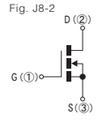

Fig. J8-3

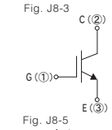

Fig. J8-4

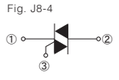

Fig. J8-5

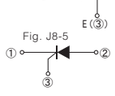

J9 Package: SC-91 FTO-220G (3pin)

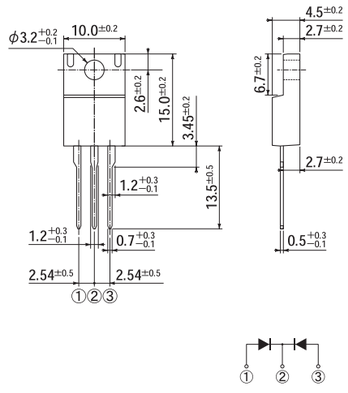

[*Unit:mm*]

K1 Package: SC-93 ITO-3P (2pin)

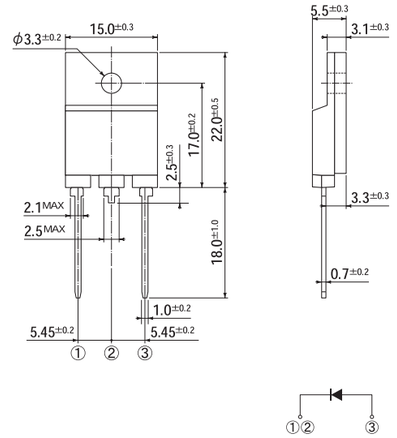

K2 Package: TO-247AD MTO-3PT (2pin)

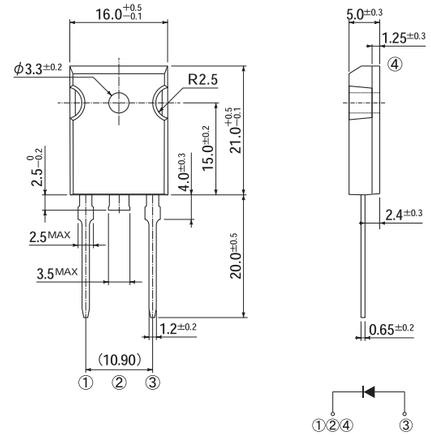

K3 Package: SC-93 ITO-3P (3pin)

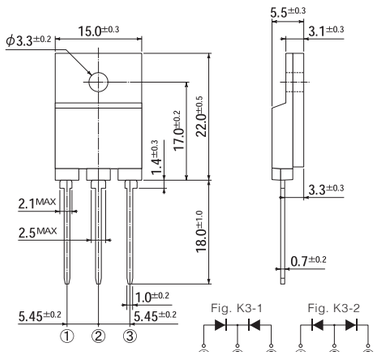

Fig. K3-1

Fig. K3-2

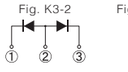

Fig. K3-3

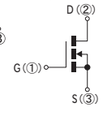

K4 Package: TO-247AD MTO-3P (3pin)

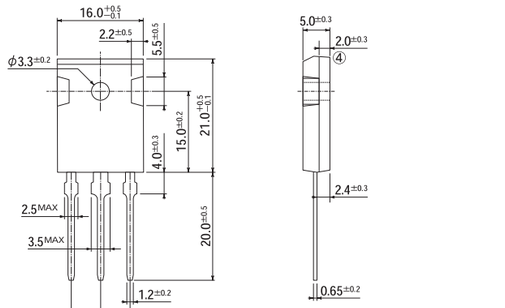

Fig. K4-1

Fig. K4-2

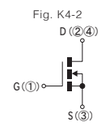

Fig. K4-3

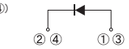

K5 Package: TO-247AD MTO-3PT (3pin)

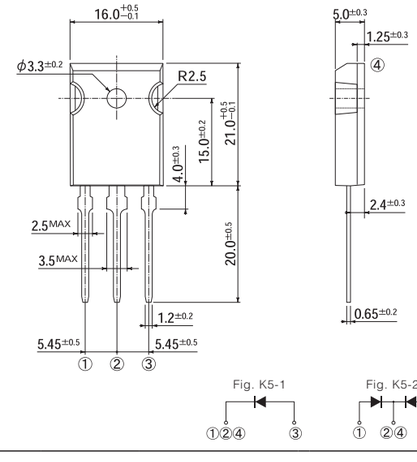

Fig. K5-1

Fig. K5-2

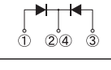

K6 Package: TO-247AD MTO-3PV

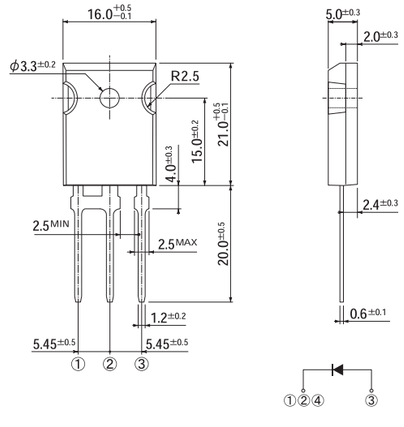

OUTLINE DIMENSIONS

[*Unit:mm*]

K7 Package: TO-247AD

MTO-3PV

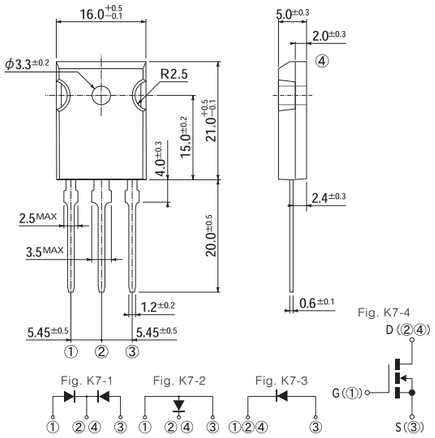

L1 Package: SOP8

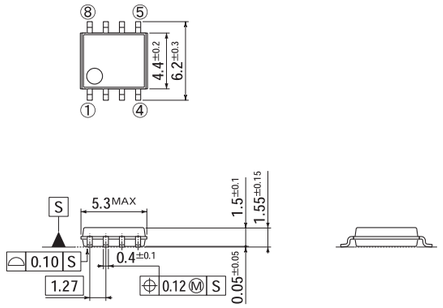

L2 Package: SOP8J

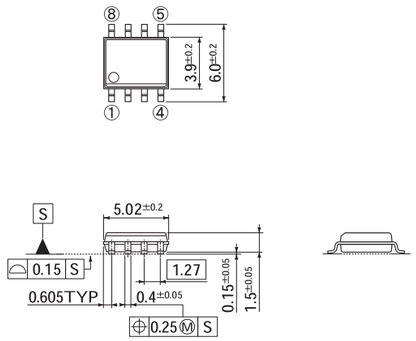

L3 Package: SOP8/7J

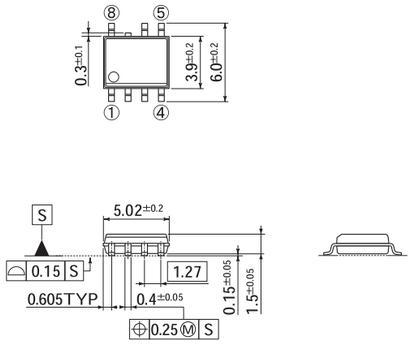

L4 Package: SOP14

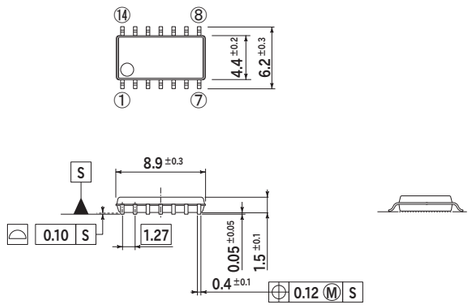

L5 Package: SOP16

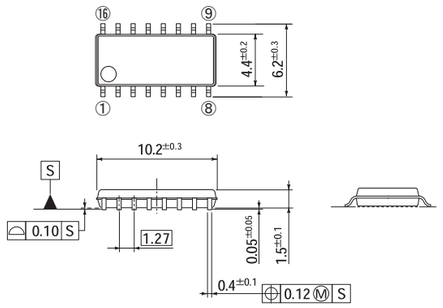

[*Unit:mm*]

L6 Package: SOP18

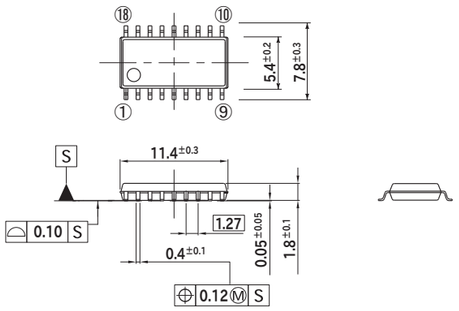

L7 Package: SOP22

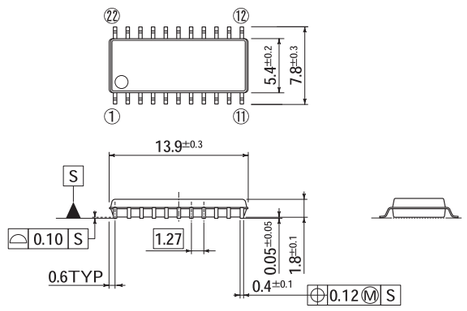

L8 Package: SOP24

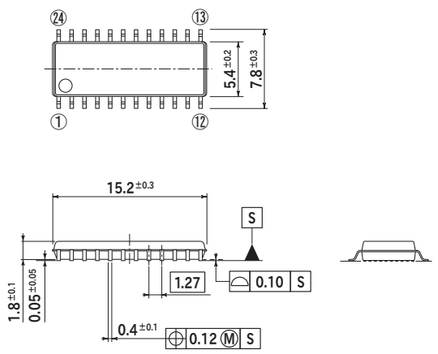

L9 Package: WSON8

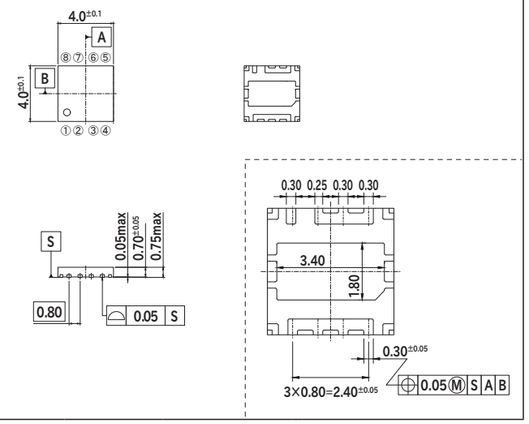

L10 Package: TSSOP10

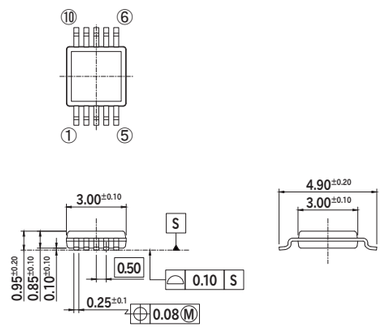

PACKING SPECIFICATION

Order Quantity & Packing Dimensions List

Please make your order: 'more than Inner Box Quantities' and 'a multiple of each Packing Unit'

Package				Fig.	Spec Code	Terminal Plating	Weight (aprx.)	MSL	Remarks	Quantity	Inner Box		Standard Packing		Packing Box (mm)		
JEDEC Package Code	JEITA Code	House Name									Method	Quantity (Pcs./Box)	Pcs./Box	Weight (kg)	L	W	H
–	–	AX057		A1	-5060	Sn	190mg	–		4,000	Tape,Ammo-Pack 52mm	4,000	32,000	7.5	330	280	270
					-5070				Standard	3,000	Tape,Ammo-Pack 26mm	3,000	36,000	6.2	340	275	230
–	–	AX06	SIDAC	A2 A3	-7000	Sn-Bi	210mg	–		200	Bulk	200	20,000	5.9	480	355	230
					-7060				Standard	4,000	Tape,Ammo-Pack 52mm	4,000	64,000	14.0	325	325	420
					-7061					4,000	Tape&Reel,Diameter 300 φ 52mm	4,000	20,000	6.3	325	325	420
					-7070					3,000	Tape,Ammo-Pack 26mm	3,000	72,000	15.7	325	325	420
–	–	AX078	TVS SIDAC	A4	-7000	Sn-Bi	390mg	–		200	Bulk	200	16,000	7.9	480	355	230
					-7060				Standard	2,000	Tape,Ammo-Pack 52mm	2,000	32,000	14.7	325	325	420
					-7070					1,500	Tape,Ammo-Pack 26mm	1,500	18,000	7.2	325	325	260
			Diodes		-5000	Sn		–		200	Bulk	200	16,000	7.9	480	355	230
					-5060				Standard	2,000	Tape,Ammo-Pack 52mm	2,000	16,000	7.5	325	325	260
					-5070					1,500	Tape,Ammo-Pack 26mm	1,500	18,000	7.2	325	325	260
–	–	AX10	TVS SIDAC	A5 A6	-7000	Sn-Bi	640mg	–		200	Bulk	200	16,000	11.1	480	355	230
					-7060				Standard	1,200	Tape,Ammo-Pack 52mm	1,200	18,000	14.4	325	325	420
					-7061					2,500	Tape&Reel,Diameter 300 φ 52mm	2,500	12,500	10.8	325	325	420
			Diodes		-5000	Sn		–		200	Bulk	200	16,000	11.1	480	355	230
					-5060				Standard	1,200	Tape,Ammo-Pack 52mm	1,200	9,600	7.3	325	325	260
					-5061					2,500	Tape&Reel,Diameter 300 φ 52mm	2,500	12,500	10.8	325	325	420
–	–	AX14		A7	-5000	Sn	1.1g	–		200	Bulk	200	16,000	17.5	480	355	230
					-5060				Standard	1,200	Tape,Ammo-Pack 52mm	1,200	9,600	11.2	325	325	260
					-5061					2,500	Tape&Reel,Diameter 300 φ 52mm	2,500	10,000	13.0	350	355	350
DO-219AB similar	SC-109	G1F	SMD	B1	-5063R	Sn	12mg	1		4,000	Tape&Reel,Diameter 180 φ	24,000	48,000	1.6	180	205	210
DO-219AA similar	–	M1F	SMD	B2	-6063	Sn	25mg	1		2,500	Tape&Reel,Diameter 180 φ	15,000	75,000	4.5	405	210	220
DO-214AC	–	1F	SMD	B3 B4	-5103	Sn	60mg	1		100	Magazine	100	15,000	2.3	545	145	110
					-5053				Standard	2,000	Tape&Reel,Diameter 180 φ	8,000	40,000	4.1	340	195	205
					-5073					7,500	Tape&Reel,Diameter 330 φ	45,000	90,000	10.8	395	245	395
–	SC-110B	CE	SMD	B5	-5063R	Sn	30mg			3,000	Tape&Reel,Diameter 180 φ	12,000	24,000	1.6	180	205	210
DO-214AA similar	–	M2F	SMD	B6 B7 B8	-5063	Sn	75mg	1	Standard	1,000	Tape&Reel,Diameter 180 φ	4,000	20,000	3.4	340	195	205
					-5073					4,000	Tape&Reel,Diameter 330 φ	4,000	48,000	8.6	395	245	395
–	–	2F	SMD	B9 B10	-5103	Sn	180mg	1		60	Magazine	60	18,000	5.2	545	145	110
					-5063				Standard	750	Tape&Reel,Diameter 180 φ	3,000	15,000	4.2	340	195	205
					-5073					3,000	Tape&Reel,Diameter 330 φ	3,000	36,000	9.2	395	245	395
–	–	SOPA-4	SMD	C1	-7062	Sn-Bi	90mg	1		1,000	Tape&Reel,Diameter 180 φ	1,000	20,000	3.6	340	195	205
TO-269AA	–	1Z	SMD	C2	-7102	Sn-Bi	130mg	1		100	Magazine	100	15,000	3.2	545	145	110
					-7062				S1ZA	750	Tape&Reel,Diameter 180 φ	3,000	15,000	4.0	340	195	205
					-7062				S1ZB	750	Tape&Reel,Diameter 180 φ	3,000	15,000	4.0	405	210	220
					-7072				Standard	3,000	Tape&Reel,Diameter 330 φ	3,000	15,000	4.6	340	340	120
–	–		THD	C3	-7101				S1ZB	100	Magazine	100	10,000	2.1	545	145	110
–	–	1N	SMD	C4	-7102	Sn-Bi	290mg	1		70	Magazine	70	5,600	4.1	545	145	100
					-7062					1,000	Tape&Reel,Diameter 250 φ	1,000	10,000	5.5	275	285	295
			THD	C5	-7101	Sn-Bi		1		70	Magazine	70	5,600	4.1	545	145	100
–	–	1NA	SMD	C6	-7102	Sn-Bi	290mg	1		70	Magazine	70	5,600	4.1	545	145	100
					-7062				Standard	1,000	Tape&Reel,Diameter 250 φ	1,000	10,000	5.5	275	285	295
			THD	C7	-7101					70	Magazine	70	5,600	4.1	545	145	100
–	–	1W	SMD	C8	-7102	Sn-Bi	500mg	1		50	Magazine	50	4,000	4.4	545	145	110
					-7062					1,000	Tape&Reel,Diameter 330 φ	3,000	6,000	5.5	395	245	395
					-7072					2,000	Tape&Reel,Diameter 380 φ	2,000	10,000	7.8	395	245	395
			THD	C9	-7101	Sn-Bi		–		50	Magazine	50	4,000	4.4	545	145	110
–	–	D3K	THD	D1	-7000	Sn-Bi	1.5g	–		500	Bulk	500	2,500	4.0	210	188	200
–	–	2S	THD	D2	-7000	Sn-Bi	2.1g	–		100	Bulk	500	6,000	14.4	410	380	170
–	–	3S	THD	D3	-7000	Sn-Bi	3.9-4.5g	–		50	Bulk	250	2,000	9.5	310	285	196
–	–	5S	THD	D4	-7000	Sn-Bi	6.3-7.5g	–		50	Bulk	250	2,000	14.5	330	330	215
–	–	JB	THD	D5	-7000	Sn-Bi	2.7g	–		250	Bulk	250	2,000	7.4	287	301	169
–	–	JA	THD	D6	-7000	Sn-Bi	4.5g	–		250	Bulk	250	2,000	9.0	327	329	185
–	–	TSB	THD (4pin)	D7	-7000	Sn-Bi	20g	–		100	Bulk	100	400	9.8	351	269	164
			THD (5pin)	D8													
–	–	JC	THD (4pin)	D7	-7500	Sn-Bi	20g	–		40	Tray	40	200	5.6	503	356	135
			THD (5pin)	D8													
–	–	JF	THD	D9	-7500	Sn-Bi	25g	–		40	Tray	40	200	5.6	503	356	135
–	–	JH	THD	D10	-7501	Sn-Bi	31g	–		40	Tray	40	200	5.6	503	356	135
–	–	MCP	SMD	E1	-4062	Ni	1.9g	1		300	Tape&Reel,Diameter 255 φ	300	1,500	5.0	280	275	190
					-4072				Standard	600	Tape&Reel,Diameter 330 φ	600	1,800	5.5	335	345	110
–	–	D30VC	THD	E2	-4000	Ag	12g	–		100	Tray	100	500	7.0	375	285	160
–	–	S2VB	THD	E3	-5000	Sn-Ag-Cu	3.0g	–		100	Tray	100	1,000	3.6	265	255	170

Exterior packaging is an example.Depending on the quantity ordered, the number of incoming, outline and weight may change.

Please make your order: 'more than Inner Box Quantities' and 'a multiple of each Packing Unit'

Package				Fig.	Spec Code	Terminal Plating	Weight (aprx.)	MSL	Remarks	Quantity	Inner Box		Standard Packing		Packing Box (mm)		
JEDEC Package Code	JEITA Code	House Name									Method	Quantity (Pcs./Box)	Pcs./Box	Weight (kg)	L	W	H
–	–	S4VB	THD	E4	-5000	Sn-Ag-Cu	5.2g	–		100	Tray	100	1,000	5.9	315	285	220
–	–	S5VB	THD	E5	-5000	Sn-Ag-Cu	9.1g	–		100	Tray	100	1,000	10.4	415	285	300
–	–	S10VB	THD	E6	-5000	Sn-Ag-Cu	8.0g	–		100	Tray	100	1,000	9.3	375	285	270
–	–	S15VB	THD	E7	-4000	Ag	16g	–		100	Tray	100	500	9.0	415	285	180
–	–	S25VB	THD	E8	-4000	Ag	21g	–		60	Bulk	60	300	7.0	335	205	165
–	–	S50VB	THD	E9	-4000	Ag	28g	–		50	Tray	50	200	6.2	335	205	165
–	–	S3WB	THD	E10	-5000	Sn-Ag-Cu	5.1g	–		100	Tray	100	1,000	6.1	315	285	220
–	–	S10WB	THD	E11	-5000	Sn-Ag-Cu	9.0g	–		100	Tray	100	1,000	9.3	375	285	270
–	–	S15WB	THD	E12	-5000	Sn-Ag-Cu	16g	–		100	Tray	100	1,000	15.1	415	285	300
–	–	S20WB	THD	E13	-5000	Sn-Ag-Cu	20g	–		100	Tray	100	700	15.0	415	285	300
–	–	SVTA	THD	E14	-5000	Sn-Ag-Cu	30g	–		50	Tray	50	250	8.7	460	295	240
–	–	SVT	THD	E15	-4000	Ag	31g	–		45	Bulk	200	200	13.6	335	205	165
–	–	MODULE	–	F1 F2 F3	-4000	Ni	42-66g	–		25	Tray	100	200	13.4	480	330	210
–	–	MG001	THD	F4	-7101	Sn-Bi	10g	–		15	Magazine	15	450	7.1	623	232	144
–	–	MG031	THD	F5	-7101	Sn-Bi	7.7g	–		12	Magazine	12	600	8.5	573	281	127
–	–	MG032	–	F6	-4500	Ni	340g	–		24	Tray	24	24	8.0	610	315	140
–	–	MG038	–	F7	-4500	Ni	180g	–		40	Tray	40	40	90	425	360	155
–	–	MG048	THD	F8	-7101	Sn-Bi	7.7g	–		9	Magazine	9	108	4.9	533	244	130
–	–	MG060	–	F9	-4500	Ni	–	–		40	Tray	40	40	9.0	425	360	155
–	–	MG061	–	F10	-4500	Ni	–	–		40	Tray	40	40	11.0	425	360	155
–	SC-63	E-pack	Only DE5VE40	G1	-5101	Sn	310mg	1	Standard	80	Magazine	80	10,000	6.9	560	130	109
					-5061					1,500	Tape&Reel,Diameter 250 φ	1,500	6,000	2.9	260	260	99
					-5071					3,000	Tape&Reel,Diameter 330 φ	3,000	12,000	5.5	335	335	99
			Other		-7101	Sn-Bi		1	Standard	80	Magazine	80	10,000	6.9	560	130	109
					-7061					1,500	Tape&Reel,Diameter 250 φ	1,500	6,000	2.9	260	260	99
					-7071					3,000	Tape&Reel,Diameter 330 φ	3,000	12,000	5.5	335	335	99
TO-252AA	–	FB	SMD	G2	-5071	Sn	320mg	1	Standard	3,000	Tape&Reel,Diameter 330 φ	6,000	36,000	18.2	380	365	390
TO-252AB similar	SC-63	FE	SMD	G3	-5061	Sn	320mg	1	Only Di	1,500	Tape&Reel,Diameter 254 φ	1,500	6,000	2.9	260	260	99
					-5071				Standard (Di,MOS)	3,000	Tape&Reel,Diameter 330 φ	3,000	12,000	5.5	335	335	99
TO-277A similar	–	FY	SMD	G4	-5063R	Sn	110mg	1		1,500	Tape&Reel,Diameter 180 φ	6,000	30,000	5.0	405	210	220
TO-252AA similar	–	FR	SMD	G5	-5071	Sn	350mg	1		3,000	Tape&Reel,Diameter 330 φ	3,000	12,000	6.3	348	348	122
–	–	LA	SMD	G6	-5070	Sn	100mg	1		3,000	Tape&Reel,Diameter 330 φ	3,000	12,000	3.0	350	350	135
MO-235B similar	–	LF	SMD	G7	-5071	Sn	100mg	1		5,000	Tape&Reel,Diameter 330 φ	10,000	50,000	11.6	385	370	238
–	SC-83 similar	STO-220	SMD	H1	-7102	Sn-Bi	1.4g	1		50	Magazine	50	4,500	9.5	555	145	110
					-7072				Standard	1,000	Tape&Reel,Diameter 330 φ	1,000	3,000	6.0	336	336	119
–	SC-83 similar	FD	SMD	H2	-5072	Sn	1.5g	1		1,000	Tape&Reel,Diameter 330 φ	1,000	3,000	6.0	336	336	119
TO-263AB-1	–	FH	SMD	H3	-7071	Sn-Bi	1.5g	1		1,000	Tape&Reel,Diameter 330 φ	1,000	3,000	6.4	336	336	119
TO-263AB	–	FG	SMD	H4	-5071	Sn	1.5g	1		1,000	Tape&Reel,Diameter 330 φ	1,000	5,000	11.0	375	360	250
–	SC-83 similar	FP	SMD	H5	-5071	Sn	1.6g	1		1,000	Tape&Reel,Diameter 330 φ	1,000	3,000	6.4	336	336	119
TO-263AB	–	FZ	SMD	H6	-5071	Sn	1.5g	–		1,000	Tape&Reel,Diameter 330 φ	1,000	3,000	7.0	375	360	165
TO-263SC	–	FZ-7p	SMD	H7	-5071	Sn	1.5g	–		1,000	Tape&Reel,Diameter 330 φ	1,000	3,000	7.0	375	360	165
–	SC-91A	FTO-220	THD	J1 J6	-7600	Sn-Bi	1.9g	–		100	Bulk	2,000	4,000	8.3	365	220	335
–	SC-91	FTO-220A	THD	J2 J7	-7600	Sn-Bi	1.9g	–		100	Bulk	2,000	4,000	8.3	365	220	335
–	SC-91	FTO-220AG	THD	J3 J8	-5600	Sn	1.6g	–		100	Bulk	2,000	4,000	8.3	365	220	335
–	SC-91	FTO-220G	THD	J4 J9	-5600	Sn	1.6g	–		100	Bulk	2,000	4,000	8.3	365	220	335
TO-220AB	SC-46	FA	THD	J5	-5100	Sn	2.0g	–		50	Magazine	1,000	6,000	17.4	303	598	172
–	SC-93	ITO-3P	MOSFET	K1 K3	-7100	Sn-Bi	4.3g	–		40	Magazine	40	1,200	8.0	624	151	92
			Diodes		-7000					100	Bulk	500	2,000	9.7	362	332	121
TO-247AD	–	MTO-3PT	THD	K2 K5	-5000	Sn	5.1g	–		100	Bulk	500	1,000	6.8	351	176	123
TO-247AD	–	MTO-3P	MOSFET	K4	-7100	Sn-Bi	6.1g	–		30	Magazine	30	900	7.6	530	145	110
			Diodes		-7000					100	Bulk	500	1,000	6.8	351	176	123
TO-247AD	–	MTO-3PV	THD	K6 K7	-5000	Sn	6.2g	–	Standard	100	Bulk	500	1,000	6.8	351	176	123
					-5100					30	Magazine	30	900	7.6	530	145	110
–	–	SOP8	SMD	L1	-7062	Sn-Bi	90mg	1		1,000	Tape&Reel,Diameter 180 φ	1,000	10,000	2.5	300	265	220
–	–	SOP8J	SMD	L2	-5072	Sn	80mg	1		3,000	Tape&Reel,Diameter 330 φ	3,000	9,000	2.6	380	380	150
–	–	SOP8/7J	SMD	L3	-5072	Sn	80mg	1		3,000	Tape&Reel,Diameter 330 φ	3,000	9,000	2.6	380	380	150
–	–	SOP14	SMD	L4	-3072	Sn-Ag	130mg	1		2,000	Tape&Reel,Diameter 330 φ	2,000	6,000	3.4	380	380	150
–	–	SOP16	SMD	L5	-3072	Sn-Ag	150mg	1		2,000	Tape&Reel,Diameter 330 φ	2,000	6,000	3.7	380	380	150
–	–	SOP18	SMD	L6	-3072	Sn-Ag	260mg	3		2,000	Tape&Reel,Diameter 330 φ	2,000	6,000	4.3	380	380	150
–	–	SOP22	SMD	L7	-3072	Sn-Ag	320mg	1		2,000	Tape&Reel,Diameter 330 φ	2,000	6,000	4.3	380	380	150
–	–	SOP24	SMD	L8	-3072	Sn-Ag	320mg	1		2,000	Tape&Reel,Diameter 330 φ	2,000	6,000	4.3	380	380	150
–	–	WSON8	SMD	L9	–	–	–	–		–	–	–	–	–	–	–	–
–	–	TSSOP10	SMD	L10	–	–	–	–		–	–	–	–	–	–	–	–

Exterior packaging is an example.Depending on the quantity ordered, the number of incoming, outline and weight may change.