DWG.NO.
SF1157-6011

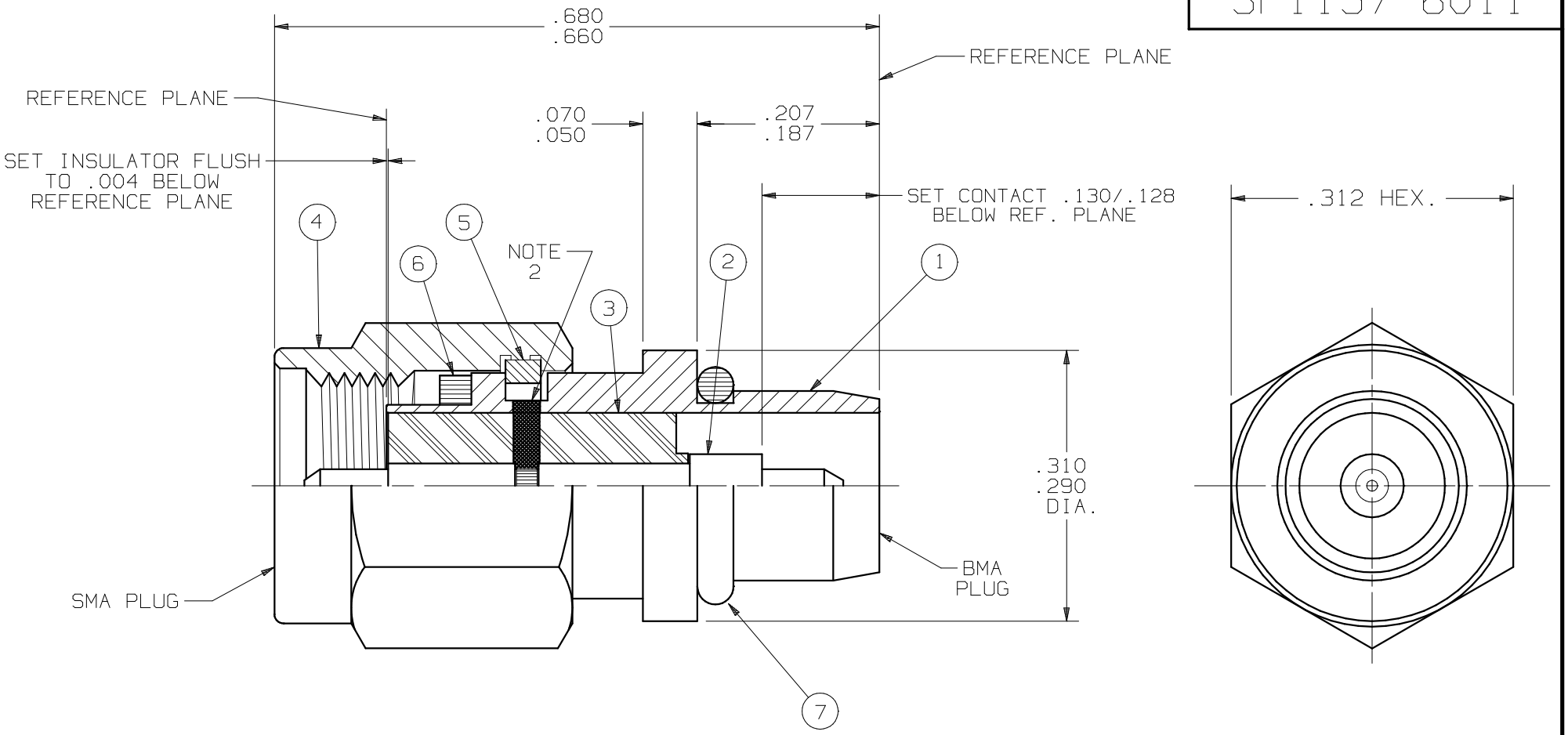

NOTES:
1) MATING END DIMENSIONS PER MD-107, MD-171 AND AS SHOWN ABOVE.
2) DRILL .039 DIA.MIN. HOLE THRU INSULATOR. INSTALL CONTACT AND FILL WITH EPOXY PER 400-05-000.

SYM.	DESCRIPTION	DATE	APPR.
-	REL. NRN 28810	08/02	STW

UNLESS OTHERWISE SPECIFIED:
1) ALL DIMENSIONS ARE AFTER PLATING.
2) BREAK CORNERS & EDGES .005 R.MAX.
3) CHAM. 1st & LAST THDS.
4) SURFACE ROUGHNESS 63 √ MIL-STD-10.
5) DIAS. ON COMMON CENTERS TO BE CONCENTRIC WITHIN .005 T.I.R.
6) REMOVE ALL BURRS.

DRAWN: BRT 8/27/02
CHECKED: STW 8/28/02
APPROVED: STW 8/28/02

DIMENSIONS ARE IN INCHES
TOLERANCES:

DECIMALS	FRACTIONAL	ANGULAR
.X ±.030	±1/64	X° ±1°0′
.XX ±.015		X°X′ ±15′
.XXX ±.005		

MATERIAL: PER BOM
FINISH: PER BOM
AREA: N/A

SIZE	CAGE NO.	SCALE
A	95077	6X

SV Microwave, Inc.
2400 Centrepark West Drive, Suite 100
West Palm Beach, FL 33409

TITLE:
SMA PLUG TO BMA PLUG ADAPTER

DWG.NO.
SHT. 1 OF 2 SF1157-6011