# Si86xx 1 Mbps Data Sheet

## 1 Mbps, 2.5 $kV_{RMS}$ Digital Isolators

Skyworks' family of ultra-low-power digital isolators are CMOS devices offering substantial data rate, propagation delay, power, size, reliability, and external BOM advantages over legacy isolation technologies. The operating parameters of these products remain stable across wide temperature ranges and throughout device service life for ease of design and highly uniform performance. All device versions have Schmitt trigger inputs for high noise immunity and only require VDD bypass capacitors.

All products support Data rates up to 1 Mbps and Enable inputs which provide a single point control for enabling and disabling output drive. All products are safety certified by UL, CSA, VDE, and CQC and support withstand ratings up to 2.5 $kV_{RMS}$.

Automotive Grade is available for certain part numbers. These products are built using automotive-specific flows at all steps in the manufacturing process to ensure the robustness and low defectivity required for automotive applications.

**Industrial Applications**

- Industrial automation systems
- Medical electronics
- Isolated switch mode supplies
- Isolated ADC, DAC
- Motor control
- Power inverters
- Communication systems

**Safety Regulatory Approvals**

- UL 1577 recognized
  - Up to 5000 $V_{RMS}$ for 1 minute
- CSA component notice 5A approval
  - IEC 60950-1, 61010-1
- VDE certification conformity
  - IEC 60747-5-2 (VDE0884 Part 2)
- CQC certification approval
  - GB4943.1

**Automotive Applications**

- On-board chargers
- Battery management systems
- Charging stations
- Traction inverters
- Hybrid Electric Vehicles
- Battery Electric Vehicles

**KEY FEATURES**

- High-speed operation
  - DC to 1 Mbps
- No start-up initialization required
- Wide Operating Supply Voltage
  - 2.5 to 5.5 V
- Up to 2500 $V_{RMS}$ isolation
- 60-year life at rated working voltage
- High electromagnetic immunity
- Ultra low power (typical)
  - 5 V Operation: 1.6 mA per channel at 1 Mbps
  - 2.5 V Operation: 1.5 mA per channel at 1 Mbps
- Tri-state outputs with ENABLE
- Schmitt trigger inputs
- Transient Immunity 50 kV/µs
- AEC-Q100 qualification
- Wide temperature range
  - –40 to 125 °C
- RoHS-compliant packages
  - SOIC-16 wide body
  - SOIC-16 narrow body
  - SOIC-8 narrow body
- Automotive-grade OPNs available
  - AIAG compliant PPAP documentation support
  - IMDS and CAMDS listing support

# 1. Ordering Guide

**Industrial and Automotive Grade OPNs**

Industrial-grade devices (part numbers having an "-I" in their suffix) are built using well-controlled, high-quality manufacturing flows to ensure robustness and reliability. Qualifications are compliant with JEDEC, and defect reduction methodologies are used throughout definition, design, evaluation, qualification, and mass production steps.

Automotive-grade devices (part numbers having an "-A" in their suffix) are built using automotive-specific flows at all steps in the manufacturing process to ensure robustness and low defectivity. These devices are supported with AIAG-compliant Production Part Approval Process (PPAP) documentation, and feature International Material Data System (IMDS) and China Automotive Material Data System (CAMDS) listing. Qualifications are compliant with AEC-Q100, and a zero-defect methodology is maintained throughout definition, design, evaluation, qualification, and mass production steps.

**Table 1.1. Ordering Guide for Valid OPNs[1, 2, 4]**

| Ordering Part Number (OPN) | Automotive OPNs[5, 6] | Number of Inputs VDD1 Side | Number of Inputs VDD2 Side | Max Data Rate (Mbps) | Default Output State | Isolation Rating (kV) | Package |
|---|---|---|---|---|---|---|---|
| Si8610AB-B-IS | Si8610AB-AS | 1 | 0 | 1 | Low | 2.5 | SOIC-8 |
| Si8620AB-B-IS | Si8620AB-AS | 2 | 0 | 1 | Low | 2.5 | SOIC-8 |
| Si8621AB-B-IS | Si8621AB-AS | 1 | 1 | 1 | Low | 2.5 | SOIC-8 |
| Si8630AB-B-IS | Si8630AB-AS | 3 | 0 | 1 | Low | 2.5 | WB SOIC-16 |
| Si8630AB-B-IS1 | Si8630AB-AS1 | 3 | 0 | 1 | Low | 2.5 | NB SOIC-16 |
| Si8631AB-B-IS | Si8631AB-AS | 2 | 1 | 1 | Low | 2.5 | WB SOIC-16 |
| Si8631AB-B-IS1 | Si8631AB-AS1 | 2 | 1 | 1 | Low | 2.5 | NB SOIC-16 |
| Si8640AB-B-IS1 | Si8640AB-AS1 | 4 | 0 | 1 | Low | 2.5 | NB SOIC-16 |
| Si8640AB-B-IS | Si8640AB-AS | 4 | 0 | 1 | Low | 2.5 | WB SOIC-16 |
| Si8641AB-B-IS1 | Si8641AB-AS1 | 3 | 1 | 1 | Low | 2.5 | NB SOIC-16 |
| Si8641AB-B-IS | Si8641AB-AS | 3 | 1 | 1 | Low | 2.5 | WB SOIC-16 |
| Si8642AB-B-IS1 | Si8642AB-AS1 | 2 | 2 | 1 | Low | 2.5 | NB SOIC-16 |
| Si8642AB-B-IS | Si8642AB-AS | 2 | 2 | 1 | Low | 2.5 | WB SOIC-16 |
| Si8650AB-B-IS1 | Si8650AB-AS1 | 5 | 0 | 1 | Low | 2.5 | NB SOIC-16 |
| Si8651AB-B-IS1 | Si8651AB-AS1 | 4 | 1 | 1 | Low | 2.5 | NB SOIC-16 |
| Si8652AB-B-IS1 | Si8652AB-AS1 | 3 | 2 | 1 | Low | 2.5 | NB SOIC-16 |
| Si8660AB-B-IS1 | Si8660AB-AS1 | 6 | 0 | 1 | Low | 2.5 | NB SOIC-16 |
| Si8661AB-B-IS1 | Si8661AB-AS1 | 5 | 1 | 1 | Low | 2.5 | NB SOIC-16 |
| Si8662AB-B-IS1 | Si8662AB-AS1 | 4 | 2 | 1 | Low | 2.5 | NB SOIC-16 |
| Si8663AB-B-IS1 | Si8663AB-AS1 | 3 | 3 | 1 | Low | 2.5 | NB SOIC-16 |

| Ordering Part Number (OPN) | Automotive OPNs[5, 6] | Number of Inputs VDD1 Side | Number of Inputs VDD2 Side | Max Data Rate (Mbps) | Default Output State | Isolation Rating (kV) | Package |
|---|---|---|---|---|---|---|---|

**Notes:**

1. All packages are RoHS-compliant with peak reflow temperatures of 260 °C according to the JEDEC industry standard classifications and peak solder temperatures.
2. “Si” and “SI” are used interchangeably.
3. An "R" at the end of the part number denotes tape and reel packaging option.
4. Temperature range is –40 to 125 °C.
5. Automotive-Grade devices (with an "–A" suffix) are identical in construction materials, topside marking, and electrical parameters to their Industrial-Grade (with an "–I" suffix) version counterparts. Automotive-Grade products are produced utilizing full automotive process flows and additional statistical process controls throughout the manufacturing flow. The Automotive-Grade part number is included on shipping labels.
6. In the top markings of each device, the Manufacturing Code represented by either “RTTTTT” or “TTTTTT” contains as its first character a letter in the range N through Z to indicate Automotive-Grade.

# Table of Contents


**1. Ordering Guide . . . 2**

**2. Functional Description . . . 5**

2.1 Theory of Operation . . . 5

**3. Device Operation . . . 6**

3.1 Device Startup . . . 8

3.2 Undervoltage Lockout . . . 8

3.3 Layout Recommendations . . . 8

3.3.1 Supply Bypass . . . 8

3.3.2 Output Pin Termination . . . 8

**4. Electrical Specifications . . . 9**

**5. Pin Descriptions . . . 30**

5.1 Pin Descriptions (Si861x/2x Narrow Body SOIC-8) . . . 30

5.2 Pin Descriptions (Si863x) . . . 31

5.3 Pin Descriptions (Si864x) . . . 32

5.4 Pin Descriptions (Si8650/51/52) . . . 33

5.5 Pin Descriptions (Si866x) . . . 34

**6. Package Outlines . . . 35**

6.1 Package Outline (16-Pin Wide Body SOIC) . . . 35

6.2 Package Outline (16-Pin Narrow Body SOIC) . . . 37

6.3 Package Outline (8-Pin Narrow Body SOIC) . . . 39

**7. Land Patterns . . . 40**

7.1 Land Pattern (16-Pin Wide-Body SOIC) . . . 40

7.2 Land Pattern (16-Pin Narrow Body SOIC) . . . 41

7.3 Land Pattern (8-Pin Narrow Body SOIC) . . . 42

**8. Top Markings . . . 43**

8.1 Top Marking (16-Pin Wide Body SOIC) . . . 43

8.2 Top Marking (16-Pin Narrow Body SOIC) . . . 44

8.3 Top Marking (8-Pin Narrow Body SOIC) . . . 45

**9. Revision History . . . 46**

# 2. Functional Description

## 2.1 Theory of Operation

The operation of an Si86xx channel is analogous to that of an opto coupler, except an RF carrier is modulated instead of light. This simple architecture provides a robust isolated data path and requires no special considerations or initialization at start-up. A simplified block diagram for a single Si86xx channel is shown in the figure below.

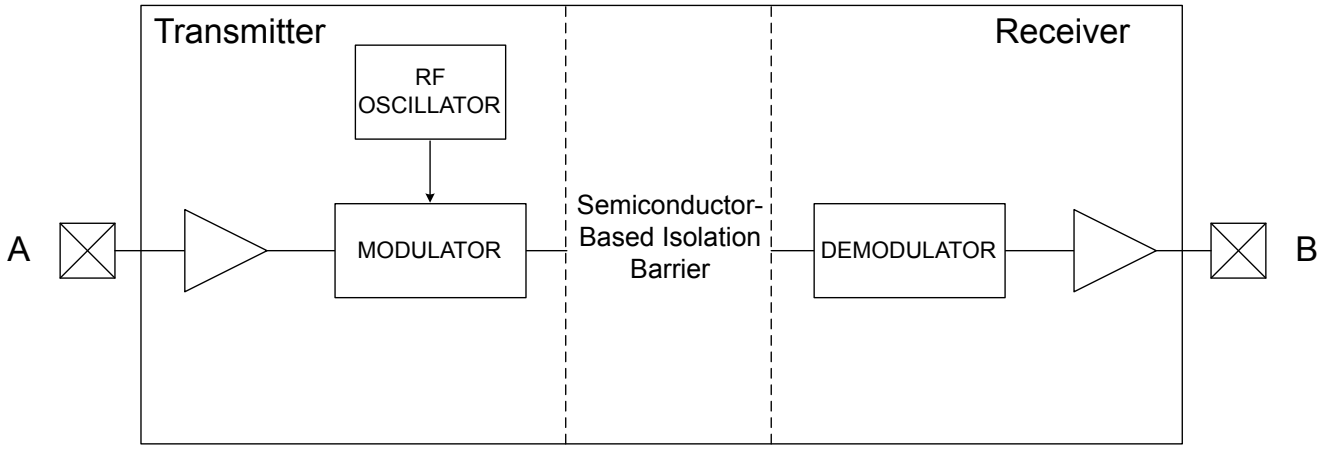


**Figure 2.1. Simplified Channel Diagram**

A channel consists of an RF Transmitter and RF Receiver separated by a semiconductor-based isolation barrier. Referring to the Transmitter, input A modulates the carrier provided by an RF oscillator using on/off keying. The Receiver contains a demodulator that decodes the input state according to its RF energy content and applies the result to output B via the output driver. This RF on/off keying scheme is superior to pulse code schemes as it provides best-in-class noise immunity, low power consumption, and better immunity to magnetic fields. See the figure below for more details.

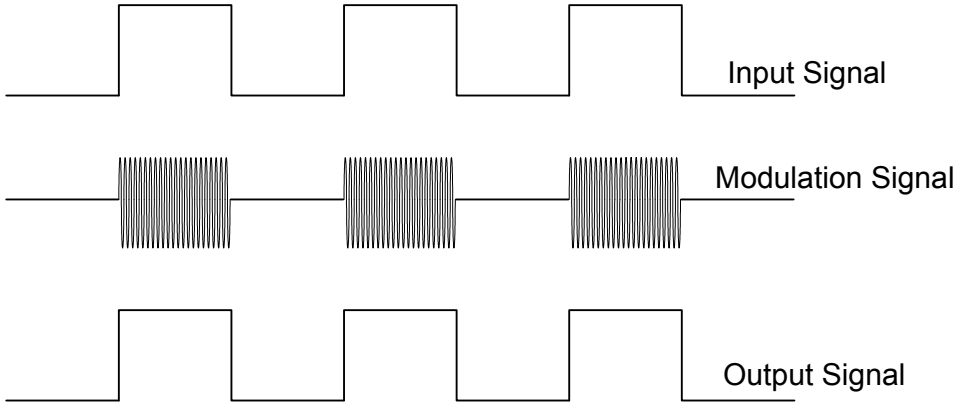


**Figure 2.2. Modulation Scheme**

## 3. Device Operation

Device behavior during start-up, normal operation, and shutdown is shown in Figure 3.1 Device Behavior during Normal Operation on page 8, where UVLO+ and UVLO- are the positive-going and negative-going thresholds respectively. Refer to the table below to determine outputs when power supply (VDD) is not present. Additionally, refer to Table 3.2 Enable Input Truth[1] on page 7 for logic conditions when enable pins are used.

**Table 3.1. Si86xx Logic Operation**

| $V_I$ Input[1,2] | EN Input[1,2,3,4] | VDDI State[1,5,6] | VDDO State[1,5,6] | $V_O$ Output[1,2] | Comments |
|---|---|---|---|---|---|
| H | H or NC | P | P | H | Enabled, normal operation. |
| L | H or NC | P | P | L | |
| X[7] | L | P | P | Hi-Z[8] | Disabled. |
| X[7] | H or NC | UP | P | L | Upon transition of VDDI from unpowered to powered, $V_O$ returns to the same state as $V_I$ in less than 1 µs. |
| X[7] | L | UP | P | Hi-Z[8] | Disabled. |
| X[7] | X[7] | P | UP | Undetermined | Upon transition of VDDO from unpowered to powered, $V_O$ returns to the same state as $V_I$ within 1 µs, if EN is in either the H or NC state. Upon transition of VDDO from unpowered to powered, $V_O$ returns to Hi-Z within 1 µs if EN is L. |

**Notes:**

1. VDDI and VDDO are the input and output power supplies. $V_I$ and $V_O$ are the respective input and output terminals. EN is the enable control input located on the same output side.
2. X = not applicable; H = Logic High; L = Logic Low; Hi-Z = High Impedance.
3. It is recommended that the enable inputs be connected to an external logic high or low level when the Si86xx is operating in noisy environments.
4. No Connect (NC) replaces EN1 on some devices. No Connects are not internally connected and can be left floating, tied to VDD, or tied to GND.
5. “Powered” state (P) is defined as 2.5 V < VDD < 5.5 V.
6. “Unpowered” state (UP) is defined as VDD = 0 V.
7. Note that an I/O can power the die for a given side through an internal diode if its source has adequate current.
8. When using the enable pin (EN) function, the output pin state is driven into a high-impedance state when the EN pin is disabled (EN = 0).

**Table 3.2. Enable Input Truth[1]**

| P/N | EN1[1,2] | EN2[1,2] | Operation |
|---|---|---|---|
| Si861x/2x | — | — | Outputs are enabled and follow input state. |
| Si8630 | — | H | Outputs B1, B2, B3 are enabled and follow input state. |
| | — | L | Outputs B1, B2, B3 are disabled and in high impedance state.[3] |
| Si8631 | H | X | Output A3 enabled and follows input state. |
| | L | X | Output A3 disabled and in high impedance state.[3] |
| | X | H | Outputs B1, B2 are enabled and follow input state. |
| | X | L | Outputs B1, B2 are disabled and in high impedance state.[3] |
| Si8640 | — | H | Outputs B1, B2, B3, B4 are enabled and follow the input state. |
| | — | L | Outputs B1, B2, B3, B4 are disabled and in high impedance state.[3] |
| Si8641 | H | X | Output A4 enabled and follows the input state. |
| | L | X | Output A4 disabled and in high impedance state.[3] |
| | X | H | Outputs B1, B2, B3 are enabled and follow the input state. |
| | X | L | Outputs B1, B2, B3 are disabled and in high impedance state.[3] |
| Si8642 | H | X | Outputs A3 and A4 are enabled and follow the input state. |
| | L | X | Outputs A3 and A4 are disabled and in high impedance state.[3] |
| | X | H | Outputs B1 and B2 are enabled and follow the input state. |
| | X | L | Outputs B1 and B2 are disabled and in high impedance state.[3] |
| Si8650 | — | H | Outputs B1, B2, B3, B4, B5 are enabled and follow input state. |
| | — | L | Outputs B1, B2, B3, B4, B5 are disabled and Logic Low or in high impedance state.[3] |
| Si8651 | H | X | Output A5 enabled and follow input state. |
| | L | X | Output A5 disabled and in high impedance state.[3] |
| | X | H | Outputs B1, B2, B3, B4 are enabled and follow input state. |
| | X | L | Outputs B1, B2, B3, B4 are disabled and in high impedance state.[3] |
| Si8652 | H | X | Outputs A4 and A5 are enabled and follow input state. |
| | L | X | Outputs A4 and A5 are disabled and in high impedance state.[3] |
| | X | H | Outputs B1, B2, B3 are enabled and follow input state. |
| | X | L | Outputs B1, B2, B3 are disabled and in high impedance state.[3] |
| Si866x | — | — | Outputs are enabled and follow input state. |

**Notes:**

1. Enable inputs EN1 and EN2 can be used for multiplexing, for clock sync, or other output control. These inputs are internally pulled-up to local VDD by a 2 µA current source allowing them to be connected to an external logic level (high or low) or left floating. To minimize noise coupling, do not connect circuit traces to EN1 or EN2 if they are left floating. If EN1, EN2 are unused, it is recommended they be connected to an external logic level, especially if the Si86xx is operating in a noisy environment.
2. X = not applicable; H = Logic High; L = Logic Low.
3. When using the enable pin (EN) function, the output pin state is driven into a high-impedance state when the EN pin is disabled (EN = 0).

### 3.1 Device Startup

Outputs are held low during powerup until VDD is above the UVLO threshold for time period tSTART. Following this, the outputs follow the states of inputs.

### 3.2 Undervoltage Lockout

Undervoltage Lockout (UVLO) is provided to prevent erroneous operation during device startup and shutdown or when VDD is below its specified operating circuits range. Both Side A and Side B each have their own undervoltage lockout monitors. Each side can enter or exit UVLO independently. For example, Side A unconditionally enters UVLO when $V_{DD1}$ falls below $V_{DD1(UVLO-)}$ and exits UVLO when $V_{DD1}$ rises above $V_{DD1(UVLO+)}$. Side B operates the same as Side A with respect to its $V_{DD2}$ supply.

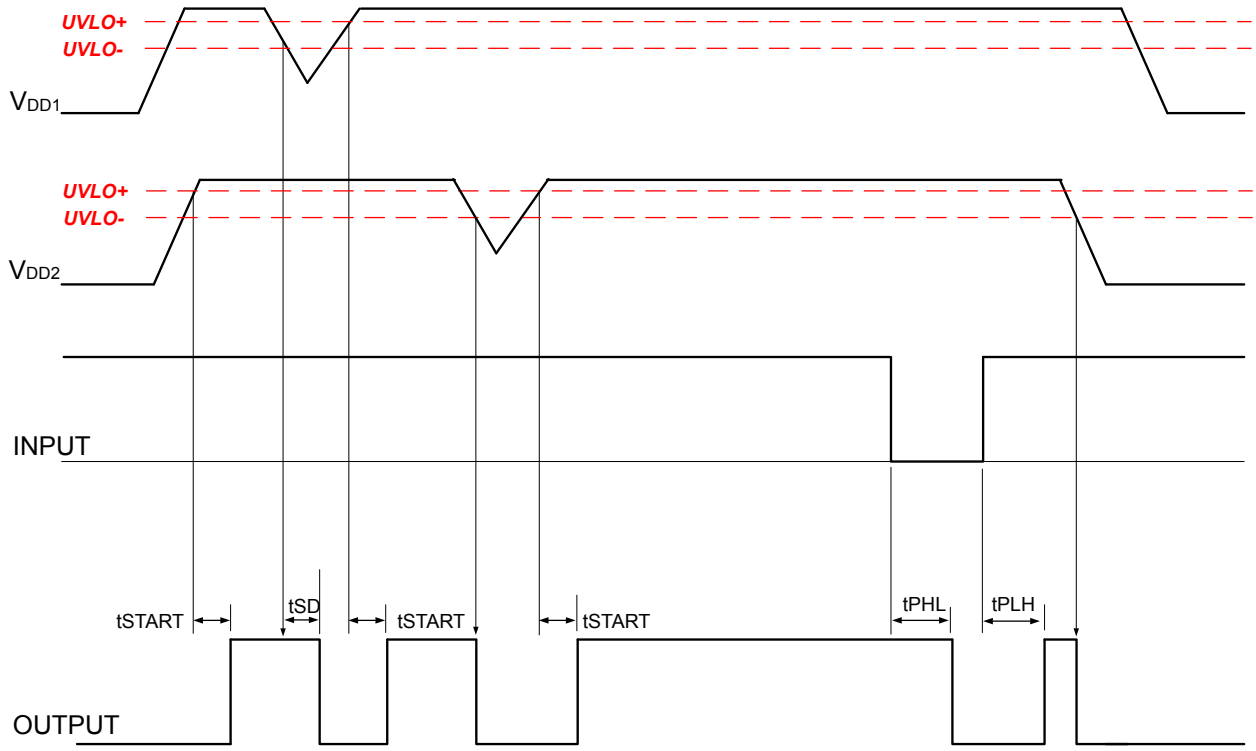


**Figure 3.1. Device Behavior during Normal Operation**

### 3.3 Layout Recommendations

To ensure safety in the end user application, high voltage circuits (i.e., circuits with >30 $V_{AC}$) must be physically separated from the safety extra-low voltage circuits (SELV is a circuit with <30 $V_{AC}$) by a certain distance (creepage/clearance). If a component, such as a digital isolator, straddles this isolation barrier, it must meet those creepage/clearance requirements and also provide a sufficiently large high-voltage breakdown protection rating (commonly referred to as working voltage protection). Table 4.5 Regulatory Information[1] on page 25 and Table 4.6 Insulation and Safety-Related Specifications on page 25 detail the working voltage and creepage/clearance capabilities of the Si86xx. These tables also detail the component standards (UL1577, IEC60747, CSA 5A), which are readily accepted by certification bodies to provide proof for end-system specifications requirements. Refer to the end-system specification (61010-1, 60950-1, 60601-1, etc.) requirements before starting any design that uses a digital isolator.

#### 3.3.1 Supply Bypass

The Si86xx family requires a 0.1 µF bypass capacitor between $V_{DD1}$ and GND1 and $V_{DD2}$ and GND2. The capacitor should be placed as close as possible to the package. To enhance the robustness of a design, the user may also include resistors (50–300 Ω ) in series with the inputs and outputs if the system is excessively noisy.

#### 3.3.2 Output Pin Termination

The nominal output impedance of an isolator driver channel is approximately 50 Ω, ±40%, which is a combination of the value of the on-chip series termination resistor and channel resistance of the output driver FET. When driving loads where transmission line effects will be a factor, output pins should be appropriately terminated with controlled impedance PCB traces.

# 4. Electrical Specifications

**Table 4.1. Recommended Operating Conditions**

| Parameter | Symbol | Min | Typ | Max | Unit |
|---|---|---|---|---|---|
| Ambient Operating Temperature[1] | $T_A$ | –40 | 25 | 125 | ºC |
| Supply Voltage | $V_{DD1}$ | 2.5 | — | 5.5 | V |
| | $V_{DD2}$ | 2.5 | — | 5.5 | V |

**Note:**
1. The maximum ambient temperature is dependent on data frequency, output loading, number of operating channels, and supply voltage.

**Table 4.2. Electrical Characteristics**

($V_{DD1}$ = 5 V±10%, $V_{DD2}$ = 5 V±10%, $T_A$ = –40 to 125 °C)

| Parameter | Symbol | Test Condition | Min | Typ | Max | Unit |
|---|---|---|---|---|---|---|
| VDD Undervoltage Threshold | VDDUV+ | $V_{DD1}$, $V_{DD2}$ rising | 1.95 | 2.24 | 2.375 | V |
| VDD Undervoltage Threshold | VDDUV– | $V_{DD1}$, $V_{DD2}$ falling | 1.88 | 2.16 | 2.325 | V |
| VDD Undervoltage Hysteresis | $VDD_{HYS}$ | | 50 | 70 | 95 | mV |
| Positive-Going Input Threshold | VT+ | All inputs rising | 1.4 | 1.67 | 1.9 | V |
| Negative-Going Input Threshold | VT– | All inputs falling | 1.0 | 1.23 | 1.4 | V |
| Input Hysteresis | $V_{HYS}$ | | 0.38 | 0.44 | 0.50 | V |
| High Level Input Voltage | $V_{IH}$ | | 2.0 | — | — | V |
| Low Level input voltage | $V_{IL}$ | | — | — | 0.8 | V |
| High Level Output Voltage | $V_{OH}$ | Ioh = –4 mA | $V_{DD1}$,$V_{DD2}$ – 0.4 | 4.8 | — | V |
| Low Level Output Voltage | $V_{OL}$ | Iol = 4 mA | — | 0.2 | 0.4 | V |
| Input Leakage Current | $I_L$ | | — | — | ±10 | µA |
| Output Impedance[1] | $Z_O$ | | — | 50 | — | Ω |
| Enable Input High Current | $I_{ENH}$ | $V_{ENx} = V_{IH}$ | — | 2.0 | — | µA |
| Enable Input Low Current | $I_{ENL}$ | $V_{ENx} = V_{IL}$ | — | 2.0 | — | µA |
| DC Supply Current (All inputs 0 V or at Supply) | | | | | | |
| Si8610Ax | | | | | | |
| $V_{DD1}$ | | $V_I$ = 0(Ax) | — | 0.6 | 1.2 | mA |
| $V_{DD2}$ | | $V_I$ = 0(Ax) | — | 0.8 | 1.5 | |
| $V_{DD1}$ | | $V_I$ = 1(Ax) | — | 1.8 | 2.9 | |
| $V_{DD2}$ | | $V_I$ = 1(Ax) | — | 0.8 | 1.5 | |

| Parameter | Symbol | Test Condition | Min | Typ | Max | Unit |
|---|---|---|---|---|---|---|
| Si8620Ax | | | | | | |
| $V_{DD1}$ | | $V_I$ = 0(Ax) | — | 0.8 | 1.4 | mA |
| $V_{DD2}$ | | $V_I$ = 0(Ax) | — | 1.4 | 2.2 | |
| $V_{DD1}$ | | $V_I$ = 1(Ax) | — | 3.3 | 5.3 | |
| $V_{DD2}$ | | $V_I$ = 1(Ax) | — | 1.4 | 2.2 | |
| Si8621Ax | | | | | | |
| $V_{DD1}$ | | $V_I$ = 0(Ax) | — | 1.2 | 1.9 | mA |
| $V_{DD2}$ | | $V_I$ = 0(Ax) | — | 1.2 | 1.9 | |
| $V_{DD1}$ | | $V_I$ = 1(Ax) | — | 2.4 | 3.8 | |
| $V_{DD2}$ | | $V_I$ = 1(Ax) | — | 2.4 | 3.8 | |
| Si8630Ax | | | | | | |
| $V_{DD1}$ | | $V_I$ = 0(Ax) | — | 0.9 | 1.6 | mA |
| $V_{DD2}$ | | $V_I$ = 0(Ax) | — | 1.9 | 3.0 | |
| $V_{DD1}$ | | $V_I$ = 1(Ax) | — | 4.6 | 7.4 | |
| $V_{DD2}$ | | $V_I$ = 1(Ax) | — | 1.9 | 3.0 | |
| Si8631Ax | | | | | | |
| $V_{DD1}$ | | $V_I$ = 0(Ax) | — | 1.3 | 2.1 | mA |
| $V_{DD2}$ | | $V_I$ = 0(Ax) | — | 1.7 | 2.7 | |
| $V_{DD1}$ | | $V_I$ = 1(Ax) | — | 3.9 | 5.9 | |
| $V_{DD2}$ | | $V_I$ = 1(Ax) | — | 3.0 | 4.5 | |
| Si8640Ax | | | | | | |
| $V_{DD1}$ | | $V_I$ = 0(Ax) | — | 1.0 | 1.6 | mA |
| $V_{DD2}$ | | $V_I$ = 0(Ax) | — | 2.4 | 3.8 | |
| $V_{DD1}$ | | $V_I$ = 1(Ax) | — | 6.1 | 9.2 | |
| $V_{DD2}$ | | $V_I$ = 1(Ax) | — | 2.5 | 4.0 | |
| Si8641Ax | | | | | | |
| $V_{DD1}$ | | $V_I$ = 0(Ax) | — | 1.4 | 2.2 | mA |
| $V_{DD2}$ | | $V_I$ = 0(Ax) | — | 2.3 | 3.7 | |
| $V_{DD1}$ | | $V_I$ = 1(Ax) | — | 5.2 | 7.8 | |
| $V_{DD2}$ | | $V_I$ = 1(Ax) | — | 3.6 | 5.4 | |
| Si8642Ax | | | | | | |
| $V_{DD1}$ | | $V_I$ = 0(Ax) | — | 1.8 | 2.9 | mA |
| $V_{DD2}$ | | $V_I$ = 0(Ax) | — | 1.8 | 2.9 | |
| $V_{DD1}$ | | $V_I$ = 1(Ax) | — | 4.4 | 6.6 | |
| $V_{DD2}$ | | $V_I$ = 1(Ax) | — | 4.4 | 6.6 | |

| Parameter | Symbol | Test Condition | Min | Typ | Max | Unit |
|---|---|---|---|---|---|---|
| Si8650Ax | | | | | | |
| $V_{DD1}$ | | $V_I$ = 0(Ax) | — | 1.1 | 1.8 | mA |
| $V_{DD2}$ | | $V_I$ = 0(Ax) | — | 3.1 | 4.7 | |
| $V_{DD1}$ | | $V_I$ = 1(Ax) | — | 7.0 | 9.8 | |
| $V_{DD2}$ | | $V_I$ = 1(Ax) | — | 3.3 | 5.0 | |
| Si8651Ax | | | | | | |
| $V_{DD1}$ | | $V_I$ = 0(Ax) | — | 1.5 | 2.4 | mA |
| $V_{DD2}$ | | $V_I$ = 0(Ax) | — | 2.7 | 4.1 | |
| $V_{DD1}$ | | $V_I$ = 1(Ax) | — | 6.6 | 9.2 | |
| $V_{DD2}$ | | $V_I$ = 1(Ax) | — | 4.0 | 6.0 | |
| Si8652Ax | | | | | | |
| $V_{DD1}$ | | $V_I$ = 0(Ax) | — | 2.0 | 3.0 | mA |
| $V_{DD2}$ | | $V_I$ = 0(Ax) | — | 2.4 | 3.6 | |
| $V_{DD1}$ | | $V_I$ = 1(Ax) | — | 5.6 | 7.8 | |
| $V_{DD2}$ | | $V_I$ = 1(Ax) | — | 5.0 | 7.5 | |
| Si8660Ax | | | | | | |
| $V_{DD1}$ | | $V_I$ = 0(Ax) | — | 1.2 | 1.9 | mA |
| $V_{DD2}$ | | $V_I$ = 0(Ax) | — | 3.5 | 5.3 | |
| $V_{DD1}$ | | $V_I$ = 1(Ax) | — | 8.8 | 12.3 | |
| $V_{DD2}$ | | $V_I$ = 1(Ax) | — | 3.7 | 5.6 | |
| Si8661Ax | | | | | | |
| $V_{DD1}$ | | $V_I$ = 0(Ax) | — | 1.7 | 2.7 | mA |
| $V_{DD2}$ | | $V_I$ = 0(Ax) | — | 3.4 | 5.1 | |
| $V_{DD1}$ | | $V_I$ = 1(Ax) | — | 7.9 | 11.1 | |
| $V_{DD2}$ | | $V_I$ = 1(Ax) | — | 4.8 | 7.2 | |
| Si8662Ax | | | | | | |
| $V_{DD1}$ | | $V_I$ = 0(Ax) | — | 2.2 | 3.3 | mA |
| $V_{DD2}$ | | $V_I$ = 0(Ax) | — | 3.0 | 4.5 | |
| $V_{DD1}$ | | $V_I$ = 1(Ax) | — | 7.5 | 10.5 | |
| $V_{DD2}$ | | $V_I$ = 1(Ax) | — | 5.6 | 8.4 | |
| Si8663Ax | | | | | | |
| $V_{DD1}$ | | $V_I$ = 0(Ax) | — | 2.6 | 3.9 | mA |
| $V_{DD2}$ | | $V_I$ = 0(Ax) | — | 2.6 | 3.9 | |
| $V_{DD1}$ | | $V_I$ = 1(Ax) | — | 6.5 | 9.1 | |
| $V_{DD2}$ | | $V_I$ = 1(Ax) | — | 6.5 | 9.1 | |

| Parameter | Symbol | Test Condition | Min | Typ | Max | Unit |
|---|---|---|---|---|---|---|
| 1 Mbps Supply Current (All inputs = 500 kHz square wave, CI = 15 pF on all Outputs) | | | | | | |
| Si8610Ax | | | | | | |
| $V_{DD1}$ | | | — | 1.2 | 2.0 | mA |
| $V_{DD2}$ | | | — | 0.9 | 1.5 | |
| Si8620Ax | | | | | | |
| $V_{DD1}$ | | | — | 2.1 | 3.1 | mA |
| $V_{DD2}$ | | | — | 1.6 | 2.4 | |
| Si8621Ax | | | | | | |
| $V_{DD1}$ | | | — | 1.9 | 2.9 | mA |
| $V_{DD2}$ | | | — | 1.9 | 2.9 | |
| Si8630Ax | | | | | | |
| $V_{DD1}$ | | | — | 2.8 | 3.9 | mA |
| $V_{DD2}$ | | | — | 2.2 | 3.1 | |
| Si8631Ax | | | | | | |
| $V_{DD1}$ | | | — | 2.7 | 3.8 | mA |
| $V_{DD2}$ | | | — | 2.6 | 3.6 | |
| Si8640Ax | | | | | | |
| $V_{DD1}$ | | | — | 3.6 | 5.0 | mA |
| $V_{DD2}$ | | | — | 2.9 | 4.0 | |
| Si8641Ax | | | | | | |
| $V_{DD1}$ | | | — | 3.4 | 4.8 | mA |
| $V_{DD2}$ | | | — | 3.3 | 4.6 | |
| Si8642Ax | | | | | | |
| $V_{DD1}$ | | | — | 3.3 | 4.6 | mA |
| $V_{DD2}$ | | | — | 3.3 | 4.6 | |
| Si8650Ax | | | | | | |
| $V_{DD1}$ | | | — | 4.1 | 5.7 | mA |
| $V_{DD2}$ | | | — | 3.7 | 5.2 | |
| Si8651Ax | | | | | | |
| $V_{DD1}$ | | | — | 4.2 | 5.8 | mA |
| $V_{DD2}$ | | | — | 3.8 | 5.3 | |
| Si8652Ax | | | | | | |
| $V_{DD1}$ | | | — | 4.0 | 5.6 | mA |
| $V_{DD2}$ | | | — | 4.0 | 5.6 | |

| Parameter | Symbol | Test Condition | Min | Typ | Max | Unit |
|---|---|---|---|---|---|---|
| Si8660Ax<br>$V_{DD1}$<br>$V_{DD2}$ | | | <br>—<br>— | <br>5.0<br>4.2 | <br>7.0<br>5.9 | mA |
| Si8661Ax<br>$V_{DD1}$<br>$V_{DD2}$ | | | <br>—<br>— | <br>4.9<br>4.6 | <br>6.9<br>6.4 | mA |
| Si8662Ax<br>$V_{DD1}$<br>$V_{DD2}$ | | | <br>—<br>— | <br>5.1<br>4.7 | <br>7.1<br>6.6 | mA |
| Si8663Ax<br>$V_{DD1}$<br>$V_{DD2}$ | | | <br>—<br>— | <br>4.9<br>4.9 | <br>6.8<br>6.8 | mA |
| Timing Characteristics | | | | | | |
| All Models | | | | | | |
| Maximum Data Rate | | | 0 | — | 1 | Mbps |
| Minimum Pulse Width | | | — | — | 250 | ns |
| Propagation Delay | $t_{PHL}$, $t_{PLH}$ | See Figure 4.2 Propagation Delay Timing on page 14 | — | — | 35 | ns |
| Pulse Width Distortion<br>$\lvert t_{PLH} – t_{PHL} \rvert$ | PWD | See Figure 4.2 Propagation Delay Timing on page 14 | — | — | 25 | ns |
| Propagation Delay Skew[2] | $t_{PSK(P-P)}$ | | — | — | 40 | ns |
| Channel-Channel Skew | $t_{PSK}$ | | — | — | 35 | ns |
| Output Rise Time | $t_r$ | $C_L$ = 15 pF<br>See Figure 4.2 Propagation Delay Timing on page 14 | — | 2.5 | 4.0 | ns |
| Output Fall Time | $t_f$ | $C_L$ = 15 pF<br>See Figure 4.2 Propagation Delay Timing on page 14 | — | 2.5 | 4.0 | ns |
| Peak eye diagram jitter | $t_{JIT(PK)}$ | See Figure 2.2 Modulation Scheme on page 5 | — | 350 | — | ps |
| Common Mode Transient Immunity | CMTI | $V_I = V_{DD}$ or 0 V<br>$V_{CM}$ = 1500 V (See Figure 4.3 Common-Mode Transient Immunity Test Circuit on page 15) | 35 | 50 | — | kV/µs |
| Enable to Data Valid | $t_{en1}$ | See Figure 4.1 ENABLE Timing Diagram on page 14 | — | 6.0 | 11 | ns |
| Enable to Data Tri-State | $t_{en2}$ | See Figure 4.1 ENABLE Timing Diagram on page 14 | — | 8.0 | 12 | ns |

| Parameter | Symbol | Test Condition | Min | Typ | Max | Unit |
|---|---|---|---|---|---|---|
| Start-up Time[3] | $t_{SU}$ | | — | 15 | 40 | µs |

**Notes:**

1. The nominal output impedance of an isolator driver channel is approximately 50 Ω, ±40%, which is a combination of the value of the on-chip series termination resistor and channel resistance of the output driver FET. When driving loads where transmission line effects will be a factor, output pins should be appropriately terminated with controlled impedance PCB traces.
2. $t_{PSK(P-P)}$ is the magnitude of the difference in propagation delay times measured between different units operating at the same supply voltages, load, and ambient temperature.
3. Start-up time is the time period from the application of power to valid data at the output.

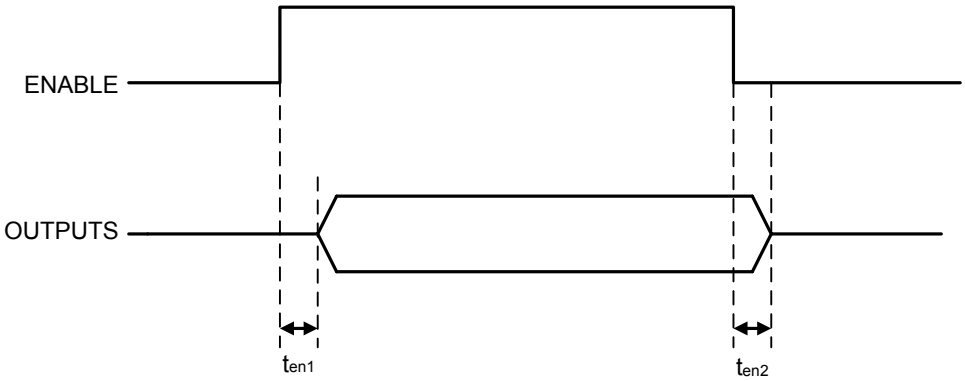


**Figure 4.1. ENABLE Timing Diagram**

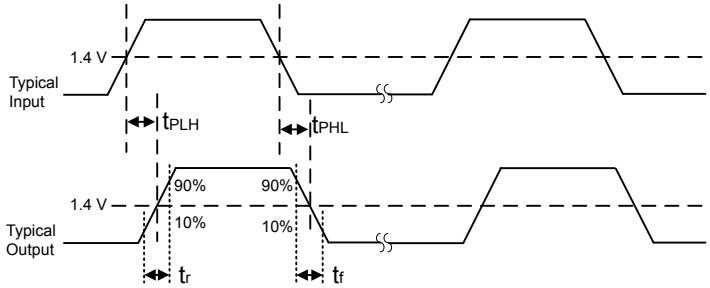


**Figure 4.2. Propagation Delay Timing**

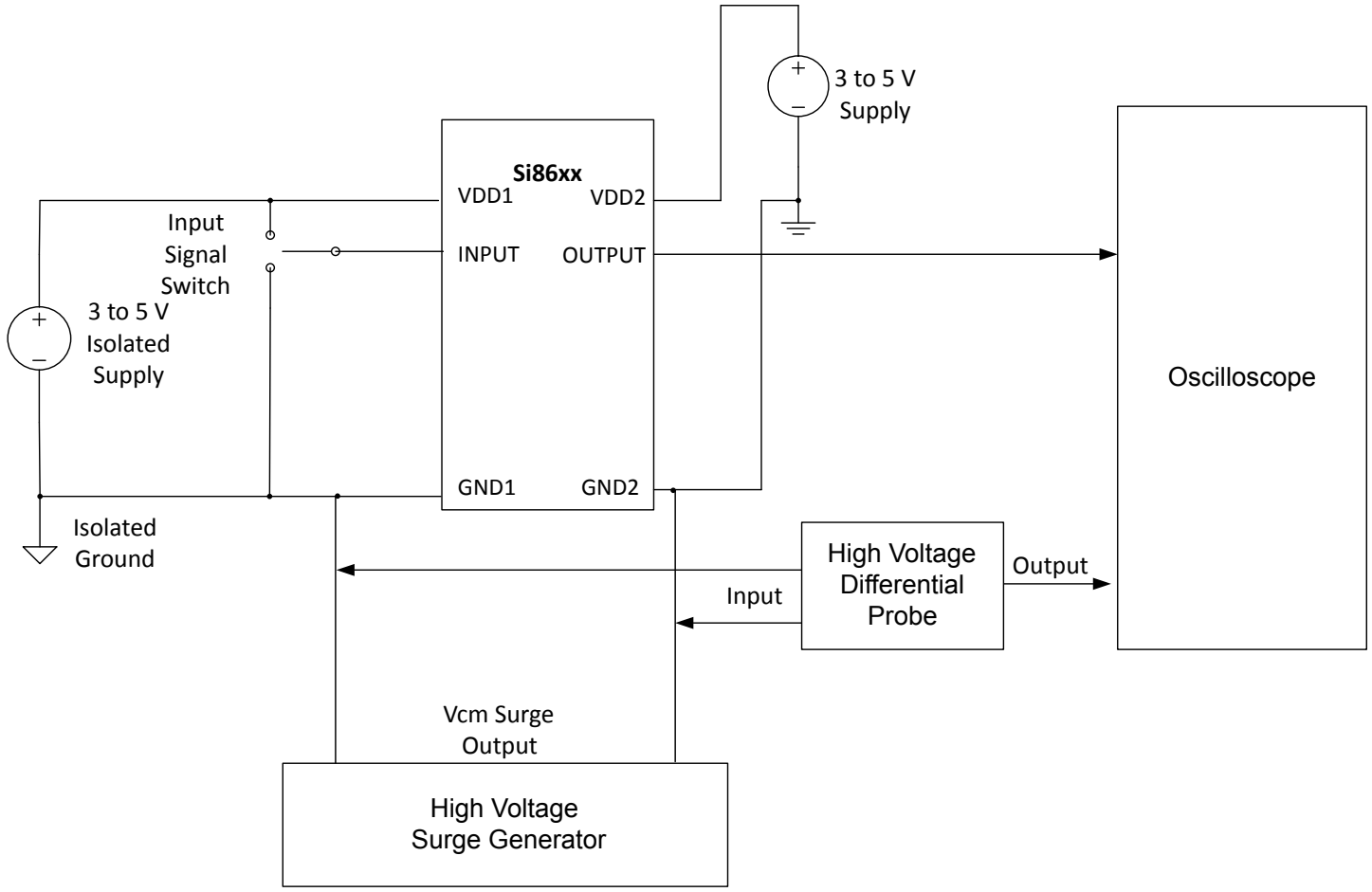


**Figure 4.3. Common-Mode Transient Immunity Test Circuit**

**Table 4.3. Electrical Characteristics**

($V_{DD1}$ = 3.3 V±10%, $V_{DD2}$ = 3.3 V±10%, $T_A$ = –40 to 125 °C)

| Parameter | Symbol | Test Condition | Min | Typ | Max | Unit |
|---|---|---|---|---|---|---|
| VDD Undervoltage Threshold | VDDUV+ | $V_{DD1}$, $V_{DD2}$ rising | 1.95 | 2.24 | 2.375 | V |
| VDD Undervoltage Threshold | VDDUV– | $V_{DD1}$, $V_{DD2}$ falling | 1.88 | 2.16 | 2.325 | V |
| VDD Undervoltage Hysteresis | $VDD_{HYS}$ | | 50 | 70 | 95 | mV |
| Positive-Going Input Threshold | VT+ | All inputs rising | 1.4 | 1.67 | 1.9 | V |
| Negative-Going Input Threshold | VT– | All inputs falling | 1.0 | 1.23 | 1.4 | V |
| Input Hysteresis | $V_{HYS}$ | | 0.38 | 0.44 | 0.50 | V |
| High Level Input Voltage | $V_{IH}$ | | 2.0 | — | — | V |
| Low Level Input Voltage | $V_{IL}$ | | — | — | 0.8 | V |
| High Level Output Voltage | $V_{OH}$ | Ioh = –4 mA | $V_{DD1}$, $V_{DD2}$ – 0.4 | 3.1 | — | V |
| Low Level Output Voltage | $V_{OL}$ | Iol = 4 mA | — | 0.2 | 0.4 | V |

| Parameter | Symbol | Test Condition | Min | Typ | Max | Unit |
|---|---|---|---|---|---|---|
| Input Leakage Current | $I_L$ | | — | — | ±10 | µA |
| Output Impedance[1] | $Z_O$ | | — | 50 | — | Ω |
| Enable Input High Current | $I_{ENH}$ | $V_{ENx} = V_{IH}$ | — | 2.0 | — | µA |
| Enable Input Low Current | $I_{ENL}$ | $V_{ENx} = V_{IL}$ | — | 2.0 | — | µA |
| DC Supply Current (All inputs 0 V or at supply) | | | | | | |
| Si8610Ax | | | | | | |
| $V_{DD1}$ | | $V_I$ = 0(Ax) | — | 0.6 | 1.2 | mA |
| $V_{DD2}$ | | $V_I$ = 0(Ax) | — | 0.8 | 1.5 | |
| $V_{DD1}$ | | $V_I$ = 1(Ax) | — | 1.8 | 2.9 | |
| $V_{DD2}$ | | $V_I$ = 1(Ax) | — | 0.8 | 1.5 | |
| Si8620Ax | | | | | | |
| $V_{DD1}$ | | $V_I$ = 0(Ax) | — | 0.8 | 1.4 | mA |
| $V_{DD2}$ | | $V_I$ = 0(Ax) | — | 1.4 | 2.2 | |
| $V_{DD1}$ | | $V_I$ = 1(Ax) | — | 3.3 | 5.3 | |
| $V_{DD2}$ | | $V_I$ = 1(Ax) | — | 1.4 | 2.2 | |
| Si8621Ax | | | | | | |
| $V_{DD1}$ | | $V_I$ = 0(Ax) | — | 1.2 | 1.9 | mA |
| $V_{DD2}$ | | $V_I$ = 0(Ax) | — | 1.2 | 1.9 | |
| $V_{DD1}$ | | $V_I$ = 1(Ax) | — | 2.4 | 3.8 | |
| $V_{DD2}$ | | $V_I$ = 1(Ax) | — | 2.4 | 3.8 | |
| Si8630Ax | | | | | | |
| $V_{DD1}$ | | $V_I$ = 0(Ax) | — | 0.9 | 1.6 | mA |
| $V_{DD2}$ | | $V_I$ = 0(Ax) | — | 1.9 | 3.0 | |
| $V_{DD1}$ | | $V_I$ = 1(Ax) | — | 4.6 | 7.4 | |
| $V_{DD2}$ | | $V_I$ = 1(Ax) | — | 1.9 | 3.0 | |
| Si8631Ax | | | | | | |
| $V_{DD1}$ | | $V_I$ = 0(Ax) | — | 1.3 | 2.1 | mA |
| $V_{DD2}$ | | $V_I$ = 0(Ax) | — | 1.7 | 2.7 | |
| $V_{DD1}$ | | $V_I$ = 1(Ax) | — | 3.9 | 5.9 | |
| $V_{DD2}$ | | $V_I$ = 1(Ax) | — | 3.0 | 4.5 | |
| Si8640Ax | | | | | | |
| $V_{DD1}$ | | $V_I$ = 0(Ax) | — | 1.0 | 1.6 | mA |
| $V_{DD2}$ | | $V_I$ = 0(Ax) | — | 2.4 | 3.8 | |
| $V_{DD1}$ | | $V_I$ = 1(Ax) | — | 6.1 | 9.2 | |
| $V_{DD2}$ | | $V_I$ = 1(Ax) | — | 2.5 | 4.0 | |

| Parameter | Symbol | Test Condition | Min | Typ | Max | Unit |
|---|---|---|---|---|---|---|
| Si8641Ax | | | | | | |
| $V_{DD1}$ | | $V_I$ = 0(Ax) | — | 1.4 | 2.2 | mA |
| $V_{DD2}$ | | $V_I$ = 0(Ax) | — | 2.3 | 3.7 | |
| $V_{DD1}$ | | $V_I$ = 1(Ax) | — | 5.2 | 7.8 | |
| $V_{DD2}$ | | $V_I$ = 1(Ax) | — | 3.6 | 5.4 | |
| Si8642Ax | | | | | | |
| $V_{DD1}$ | | $V_I$ = 0(Ax) | — | 1.8 | 2.9 | mA |
| $V_{DD2}$ | | $V_I$ = 0(Ax) | — | 1.8 | 2.9 | |
| $V_{DD1}$ | | $V_I$ = 1(Ax) | — | 4.4 | 6.6 | |
| $V_{DD2}$ | | $V_I$ = 1(Ax) | — | 4.4 | 6.6 | |
| Si8650Ax | | | | | | |
| $V_{DD1}$ | | $V_I$ = 0(Ax) | — | 1.1 | 1.8 | mA |
| $V_{DD2}$ | | $V_I$ = 0(Ax) | — | 3.1 | 4.7 | |
| $V_{DD1}$ | | $V_I$ = 1(Ax) | — | 7.0 | 9.8 | |
| $V_{DD2}$ | | $V_I$ = 1(Ax) | — | 3.3 | 5.0 | |
| Si8651Ax | | | | | | |
| $V_{DD1}$ | | $V_I$ = 0(Ax) | — | 1.5 | 2.4 | mA |
| $V_{DD2}$ | | $V_I$ = 0(Ax) | — | 2.7 | 4.1 | |
| $V_{DD1}$ | | $V_I$ = 1(Ax) | — | 6.6 | 9.2 | |
| $V_{DD2}$ | | $V_I$ = 1(Ax) | — | 4.0 | 6.0 | |
| Si8652Ax | | | | | | |
| $V_{DD1}$ | | $V_I$ = 0(Ax) | — | 2.0 | 3.0 | mA |
| $V_{DD2}$ | | $V_I$ = 0(Ax) | — | 2.4 | 3.6 | |
| $V_{DD1}$ | | $V_I$ = 1(Ax) | — | 5.6 | 7.8 | |
| $V_{DD2}$ | | $V_I$ = 1(Ax) | — | 5.0 | 7.5 | |
| Si8660Ax | | | | | | |
| $V_{DD1}$ | | $V_I$ = 0(Ax) | — | 1.2 | 1.9 | mA |
| $V_{DD2}$ | | $V_I$ = 0(Ax) | — | 3.5 | 5.3 | |
| $V_{DD1}$ | | $V_I$ = 1(Ax) | — | 8.8 | 12.3 | |
| $V_{DD2}$ | | $V_I$ = 1(Ax) | — | 3.7 | 5.6 | |
| Si8661Ax | | | | | | |
| $V_{DD1}$ | | $V_I$ = 0(Ax) | — | 1.7 | 2.7 | mA |
| $V_{DD2}$ | | $V_I$ = 0(Ax) | — | 3.4 | 5.1 | |
| $V_{DD1}$ | | $V_I$ = 1(Ax) | — | 7.9 | 11.1 | |
| $V_{DD2}$ | | $V_I$ = 1(Ax) | — | 4.8 | 7.2 | |

| Parameter | Symbol | Test Condition | Min | Typ | Max | Unit |
|---|---|---|---|---|---|---|
| Si8662Ax | | | | | | |
| $V_{DD1}$ | | $V_I$ = 0(Ax) | — | 2.2 | 3.3 | mA |
| $V_{DD2}$ | | $V_I$ = 0(Ax) | — | 3.0 | 4.5 | |
| $V_{DD1}$ | | $V_I$ = 1(Ax) | — | 7.5 | 10.5 | |
| $V_{DD2}$ | | $V_I$ = 1(Ax) | — | 5.6 | 8.4 | |
| Si8663Ax | | | | | | |
| $V_{DD1}$ | | $V_I$ = 0(Ax) | — | 2.6 | 3.9 | mA |
| $V_{DD2}$ | | $V_I$ = 0(Ax) | — | 2.6 | 3.9 | |
| $V_{DD1}$ | | $V_I$ = 1(Ax) | — | 6.5 | 9.1 | |
| $V_{DD2}$ | | $V_I$ = 1(Ax) | — | 6.5 | 9.1 | |
| 1 Mbps Supply Current (All inputs = 500 kHz square wave, CI = 15 pF on all outputs) | | | | | | |
| Si8610Ax | | | | | | |
| $V_{DD1}$ | | | — | 1.2 | 2.0 | mA |
| $V_{DD2}$ | | | — | 0.9 | 1.5 | |
| Si8620Ax | | | | | | |
| $V_{DD1}$ | | | — | 2.1 | 3.1 | mA |
| $V_{DD2}$ | | | — | 1.6 | 2.4 | |
| Si8621Ax | | | | | | |
| $V_{DD1}$ | | | — | 1.9 | 2.9 | mA |
| $V_{DD2}$ | | | — | 1.9 | 2.9 | |
| Si8630Ax | | | | | | |
| $V_{DD1}$ | | | — | 2.8 | 3.9 | mA |
| $V_{DD2}$ | | | — | 2.2 | 3.1 | |
| Si8631Ax | | | | | | |
| $V_{DD1}$ | | | — | 2.7 | 3.8 | mA |
| $V_{DD2}$ | | | — | 2.6 | 3.6 | |
| Si8640Ax | | | | | | |
| $V_{DD1}$ | | | — | 3.6 | 5.0 | mA |
| $V_{DD2}$ | | | — | 2.9 | 4.0 | |
| Si8641Ax | | | | | | |
| $V_{DD1}$ | | | — | 3.4 | 4.8 | mA |
| $V_{DD2}$ | | | — | 3.3 | 4.6 | |
| Si8642Ax | | | | | | |
| $V_{DD1}$ | | | — | 3.3 | 4.6 | mA |
| $V_{DD2}$ | | | — | 3.3 | 4.6 | |

| Parameter | Symbol | Test Condition | Min | Typ | Max | Unit |
|---|---|---|---|---|---|---|
| Si8650Ax | | | | | | |
| $V_{DD1}$ | | | — | 4.1 | 5.7 | mA |
| $V_{DD2}$ | | | — | 3.7 | 5.2 | |
| Si8651Ax | | | | | | |
| $V_{DD1}$ | | | — | 4.2 | 5.8 | mA |
| $V_{DD2}$ | | | — | 3.8 | 5.3 | |
| Si8652Ax | | | | | | |
| $V_{DD1}$ | | | — | 4.0 | 5.6 | mA |
| $V_{DD2}$ | | | — | 4.0 | 5.6 | |
| Si8660Ax | | | | | | |
| $V_{DD1}$ | | | — | 5.0 | 7.0 | mA |
| $V_{DD2}$ | | | — | 4.2 | 5.9 | |
| Si8661Ax | | | | | | |
| $V_{DD1}$ | | | — | 4.9 | 6.9 | mA |
| $V_{DD2}$ | | | — | 4.6 | 6.4 | |
| Si8662Ax | | | | | | |
| $V_{DD1}$ | | | — | 5.1 | 7.1 | mA |
| $V_{DD2}$ | | | — | 4.7 | 6.6 | |
| Si8663Ax | | | | | | |
| $V_{DD1}$ | | | — | 4.9 | 6.8 | mA |
| $V_{DD2}$ | | | — | 4.9 | 6.8 | |
| Timing Characteristics | | | | | | |
| All Models | | | | | | |
| Maximum Data Rate | | | 0 | — | 1 | Mbps |
| Minimum Pulse Width | | | — | — | 250 | ns |
| Propagation Delay | $t_{PHL}$, $t_{PLH}$ | See Figure 4.2 Propagation Delay Timing on page 14 | — | — | 35 | ns |
| Pulse Width Distortion $\lvert t_{PLH} - t_{PHL} \rvert$ | PWD | See Figure 4.2 Propagation Delay Timing on page 14 | — | — | 25 | ns |
| Propagation Delay Skew[2] | $t_{PSK(P-P)}$ | | — | — | 40 | ns |
| Channel-Channel Skew | $t_{PSK}$ | | — | — | 35 | ns |
| Output Rise Time | $t_r$ | $C_L$ = 15 pF<br>See Figure 4.2 Propagation Delay Timing on page 14 | — | 2.5 | 4.0 | ns |

| Parameter | Symbol | Test Condition | Min | Typ | Max | Unit |
|---|---|---|---|---|---|---|
| Output Fall Time | $t_f$ | $C_L$ = 15 pF<br>See Figure 4.2 Propagation Delay Timing on page 14 | — | 2.5 | 4.0 | ns |
| Peak eye diagram jitter | $t_{JIT(PK)}$ | See Figure 2.2 Modulation Scheme on page 5 | — | 350 | — | ps |
| Common Mode Transient Immunity | CMTI | $V_I = V_{DD}$ or 0 V<br>$V_{CM}$ = 1500 V (see Figure 4.3 Common-Mode Transient Immunity Test Circuit on page 15) | 35 | 50 | — | kV/µs |
| Enable to Data Valid | $t_{en1}$ | See Figure 4.1 ENABLE Timing Diagram on page 14 | — | 6.0 | 11 | ns |
| Enable to Data Tri-State | $t_{en2}$ | See Figure 4.1 ENABLE Timing Diagram on page 14 | — | 8.0 | 12 | ns |
| Start-Up Time[3] | $t_{SU}$ | | — | 15 | 40 | µs |

**Notes:**

1. The nominal output impedance of an isolator driver channel is approximately 50 Ω, ±40%, which is a combination of the value of the on-chip series termination resistor and channel resistance of the output driver FET. When driving loads where transmission line effects will be a factor, output pins should be appropriately terminated with controlled impedance PCB traces.
2. $t_{PSK(P-P)}$ is the magnitude of the difference in propagation delay times measured between different units operating at the same supply voltages, load, and ambient temperature.
3. Start-up time is the time period from the application of power to valid data at the output.

**Table 4.4. Electrical Characteristics**

($V_{DD1}$ = 2.5 V ±5%, $V_{DD2}$ = 2.5 V ±5%, $T_A$ = –40 to 125 °C)

| Parameter | Symbol | Test Condition | Min | Typ | Max | Unit |
|---|---|---|---|---|---|---|
| VDD Undervoltage Threshold | VDDUV+ | $V_{DD1}$, $V_{DD2}$ rising | 1.95 | 2.24 | 2.375 | V |
| VDD Undervoltage Threshold | VDDUV– | $V_{DD1}$, $V_{DD2}$ falling | 1.88 | 2.16 | 2.325 | V |
| VDD Undervoltage Hysteresis | $VDD_{HYS}$ | | 50 | 70 | 95 | mV |
| Positive-Going Input Threshold | VT+ | All inputs rising | 1.4 | 1.67 | 1.9 | V |
| Negative-Going Input Threshold | VT– | All inputs falling | 1.0 | 1.23 | 1.4 | V |
| Input Hysteresis | $V_{HYS}$ | | 0.38 | 0.44 | 0.50 | V |
| High Level Input Voltage | $V_{IH}$ | | 2.0 | — | — | V |
| Low Level Input Voltage | $V_{IL}$ | | — | — | 0.8 | V |
| High Level Output Voltage | $V_{OH}$ | Ioh = –4 mA | $V_{DD1}$,$V_{DD2}$ – 0.4 | 2.3 | — | V |
| Low Level Output Voltage | $V_{OL}$ | Iol = 4 mA | — | 0.2 | 0.4 | V |
| Input Leakage Current | $I_L$ | | — | — | ±10 | µA |
| Output Impedance[1] | $Z_O$ | | — | 50 | — | Ω |

| Parameter | Symbol | Test Condition | Min | Typ | Max | Unit |
|---|---|---|---|---|---|---|
| Enable Input High Current | $I_{ENH}$ | $V_{ENx} = V_{IH}$ | — | 2.0 | — | µA |
| Enable Input Low Current | $I_{ENL}$ | $V_{ENx} = V_{IL}$ | — | 2.0 | — | µA |
| DC Supply Current (All inputs 0 V or at supply) | | | | | | |
| Si8610Ax | | | | | | |
| $V_{DD1}$ | | $V_I = 0(Ax)$ | — | 0.6 | 1.2 | mA |
| $V_{DD2}$ | | $V_I = 0(Ax)$ | — | 0.8 | 1.5 | |
| $V_{DD1}$ | | $V_I = 1(Ax)$ | — | 1.8 | 2.9 | |
| $V_{DD2}$ | | $V_I = 1(Ax)$ | — | 0.8 | 1.5 | |
| Si8620Ax | | | | | | |
| $V_{DD1}$ | | $V_I = 0(Ax)$ | — | 0.8 | 1.4 | mA |
| $V_{DD2}$ | | $V_I = 0(Ax)$ | — | 1.4 | 2.2 | |
| $V_{DD1}$ | | $V_I = 1(Ax)$ | — | 3.3 | 5.3 | |
| $V_{DD2}$ | | $V_I = 1(Ax)$ | — | 1.4 | 2.2 | |
| Si8621Ax | | | | | | |
| $V_{DD1}$ | | $V_I = 0(Ax)$ | — | 1.2 | 1.9 | mA |
| $V_{DD2}$ | | $V_I = 0(Ax)$ | — | 1.2 | 1.9 | |
| $V_{DD1}$ | | $V_I = 1(Ax)$ | — | 2.4 | 3.8 | |
| $V_{DD2}$ | | $V_I = 1(Ax)$ | — | 2.4 | 3.8 | |
| Si8630Ax | | | | | | |
| $V_{DD1}$ | | $V_I = 0(Ax)$ | — | 0.9 | 1.6 | mA |
| $V_{DD2}$ | | $V_I = 0(Ax)$ | — | 1.9 | 3.0 | |
| $V_{DD1}$ | | $V_I = 1(Ax)$ | — | 4.6 | 7.4 | |
| $V_{DD2}$ | | $V_I = 1(Ax)$ | — | 1.9 | 3.0 | |
| Si8631Ax | | | | | | |
| $V_{DD1}$ | | $V_I = 0(Ax)$ | — | 1.3 | 2.1 | mA |
| $V_{DD2}$ | | $V_I = 0(Ax)$ | — | 1.7 | 2.7 | |
| $V_{DD1}$ | | $V_I = 1(Ax)$ | — | 3.9 | 5.9 | |
| $V_{DD2}$ | | $V_I = 1(Ax)$ | — | 3.0 | 4.5 | |
| Si8640Ax | | | | | | |
| $V_{DD1}$ | | $V_I = 0(Ax)$ | — | 1.0 | 1.6 | mA |
| $V_{DD2}$ | | $V_I = 0(Ax)$ | — | 2.4 | 3.8 | |
| $V_{DD1}$ | | $V_I = 1(Ax)$ | — | 6.1 | 9.2 | |
| $V_{DD2}$ | | $V_I = 1(Ax)$ | — | 2.5 | 4.0 | |

| Parameter | Symbol | Test Condition | Min | Typ | Max | Unit |
|---|---|---|---|---|---|---|
| Si8641Ax | | | | | | |
| $V_{DD1}$ | | $V_I$ = 0(Ax) | — | 1.4 | 2.2 | mA |
| $V_{DD2}$ | | $V_I$ = 0(Ax) | — | 2.3 | 3.7 | |
| $V_{DD1}$ | | $V_I$ = 1(Ax) | — | 5.2 | 7.8 | |
| $V_{DD2}$ | | $V_I$ = 1(Ax) | — | 3.6 | 5.4 | |
| Si8642Ax | | | | | | |
| $V_{DD1}$ | | $V_I$ = 0(Ax) | — | 1.8 | 2.9 | mA |
| $V_{DD2}$ | | $V_I$ = 0(Ax) | — | 1.8 | 2.9 | |
| $V_{DD1}$ | | $V_I$ = 1(Ax) | — | 4.4 | 6.6 | |
| $V_{DD2}$ | | $V_I$ = 1(Ax) | — | 4.4 | 6.6 | |
| Si8650Ax | | | | | | |
| $V_{DD1}$ | | $V_I$ = 0(Ax) | — | 1.1 | 1.8 | mA |
| $V_{DD2}$ | | $V_I$ = 0(Ax) | — | 3.1 | 4.7 | |
| $V_{DD1}$ | | $V_I$ = 1(Ax) | — | 7.0 | 9.8 | |
| $V_{DD2}$ | | $V_I$ = 1(Ax) | — | 3.3 | 5.0 | |
| Si8651Ax | | | | | | |
| $V_{DD1}$ | | $V_I$ = 0(Ax) | — | 1.5 | 2.4 | mA |
| $V_{DD2}$ | | $V_I$ = 0(Ax) | — | 2.7 | 4.1 | |
| $V_{DD1}$ | | $V_I$ = 1(Ax) | — | 6.6 | 9.2 | |
| $V_{DD2}$ | | $V_I$ = 1(Ax) | — | 4.0 | 6.0 | |
| Si8652Ax | | | | | | |
| $V_{DD1}$ | | $V_I$ = 0(Ax) | — | 2.0 | 3.0 | mA |
| $V_{DD2}$ | | $V_I$ = 0(Ax) | — | 2.4 | 3.6 | |
| $V_{DD1}$ | | $V_I$ = 1(Ax) | — | 5.6 | 7.8 | |
| $V_{DD2}$ | | $V_I$ = 1(Ax) | — | 5.0 | 7.5 | |
| Si8660Ax | | | | | | |
| $V_{DD1}$ | | $V_I$ = 0(Ax) | — | 1.2 | 1.9 | mA |
| $V_{DD2}$ | | $V_I$ = 0(Ax) | — | 3.5 | 5.3 | |
| $V_{DD1}$ | | $V_I$ = 1(Ax) | — | 8.8 | 12.3 | |
| $V_{DD2}$ | | $V_I$ = 1(Ax) | — | 3.7 | 5.6 | |
| Si8661Ax | | | | | | |
| $V_{DD1}$ | | $V_I$ = 0(Ax) | — | 1.7 | 2.7 | mA |
| $V_{DD2}$ | | $V_I$ = 0(Ax) | — | 3.4 | 5.1 | |
| $V_{DD1}$ | | $V_I$ = 1(Ax) | — | 7.9 | 11.1 | |
| $V_{DD2}$ | | $V_I$ = 1(Ax) | — | 4.8 | 7.2 | |

| Parameter | Symbol | Test Condition | Min | Typ | Max | Unit |
|---|---|---|---|---|---|---|
| Si8662Ax | | | | | | |
| $V_{DD1}$ | | $V_I$ = 0(Ax) | — | 2.2 | 3.3 | mA |
| $V_{DD2}$ | | $V_I$ = 0(Ax) | — | 3.0 | 4.5 | |
| $V_{DD1}$ | | $V_I$ = 1(Ax) | — | 7.5 | 10.5 | |
| $V_{DD2}$ | | $V_I$ = 1(Ax) | — | 5.6 | 8.4 | |
| Si8663Ax | | | | | | |
| $V_{DD1}$ | | $V_I$ = 0(Ax) | — | 2.6 | 3.9 | mA |
| $V_{DD2}$ | | $V_I$ = 0(Ax) | — | 2.6 | 3.9 | |
| $V_{DD1}$ | | $V_I$ = 1(Ax) | — | 6.5 | 9.1 | |
| $V_{DD2}$ | | $V_I$ = 1(Ax) | — | 6.5 | 9.1 | |
| 1 Mbps Supply Current (All inputs = 500 kHz square wave, CI = 15 pF on all outputs) | | | | | | |
| Si8610Ax | | | | | | |
| $V_{DD1}$ | | | — | 1.2 | 2.0 | mA |
| $V_{DD2}$ | | | — | 0.9 | 1.5 | |
| Si8620Ax | | | | | | |
| $V_{DD1}$ | | | — | 2.1 | 3.1 | mA |
| $V_{DD2}$ | | | — | 1.6 | 2.4 | |
| Si8621Ax | | | | | | |
| $V_{DD1}$ | | | — | 1.9 | — | mA |
| $V_{DD2}$ | | | — | 1.9 | — | |
| Si8630Ax | | | | | | |
| $V_{DD1}$ | | | — | 2.8 | 3.9 | mA |
| $V_{DD2}$ | | | — | 2.2 | 3.1 | |
| Si8631Ax | | | | | | |
| $V_{DD1}$ | | | — | 2.7 | 3.8 | mA |
| $V_{DD2}$ | | | — | 2.6 | 3.6 | |
| Si8640Ax | | | | | | |
| $V_{DD1}$ | | | — | 3.6 | 5.0 | mA |
| $V_{DD2}$ | | | — | 2.9 | 4.0 | |
| Si8641Ax | | | | | | |
| $V_{DD1}$ | | | — | 3.4 | 4.8 | mA |
| $V_{DD2}$ | | | — | 3.3 | 4.6 | |
| Si8642Ax | | | | | | |
| $V_{DD1}$ | | | — | 3.3 | 4.6 | mA |
| $V_{DD2}$ | | | — | 3.3 | 4.6 | |

| Parameter | Symbol | Test Condition | Min | Typ | Max | Unit |
|---|---|---|---|---|---|---|
| Si8650Ax | | | | | | |
| $V_{DD1}$ | | | — | 4.1 | 5.7 | mA |
| $V_{DD2}$ | | | — | 3.7 | 5.2 | |
| Si8651Ax | | | | | | |
| $V_{DD1}$ | | | — | 4.2 | 5.8 | mA |
| $V_{DD2}$ | | | — | 3.8 | 5.3 | |
| Si8652Ax | | | | | | |
| $V_{DD1}$ | | | — | 4.0 | 5.6 | mA |
| $V_{DD2}$ | | | — | 4.0 | 5.6 | |
| Si8660Ax | | | | | | |
| $V_{DD1}$ | | | — | 5.0 | 7.0 | mA |
| $V_{DD2}$ | | | — | 4.2 | 5.9 | |
| Si8661Ax | | | | | | |
| $V_{DD1}$ | | | — | 4.9 | 6.9 | mA |
| $V_{DD2}$ | | | — | 4.6 | 6.4 | |
| Si8662Ax | | | | | | |
| $V_{DD1}$ | | | — | 5.1 | 7.1 | mA |
| $V_{DD2}$ | | | — | 4.7 | 6.6 | |
| Si8663Ax | | | | | | |
| $V_{DD1}$ | | | — | 4.9 | 6.8 | mA |
| $V_{DD2}$ | | | — | 4.9 | 6.8 | |
| Timing Characteristics | | | | | | |
| All Models | | | | | | |
| Maximum Data Rate | | | 0 | — | 1 | Mbps |
| Minimum Pulse Width | | | — | — | 250 | ns |
| Propagation Delay | $t_{PHL}$, $t_{PLH}$ | See Figure 4.2 Propagation Delay Timing on page 14 | — | — | 35 | ns |
| Pulse Width Distortion $\lvert t_{PLH} - t_{PHL} \rvert$ | PWD | See Figure 4.2 Propagation Delay Timing on page 14 | — | — | 25 | ns |
| Propagation Delay Skew[2] | $t_{PSK(P-P)}$ | | — | — | 40 | ns |
| Channel-Channel Skew | $t_{PSK}$ | | — | — | 35 | ns |
| Output Rise Time | $t_r$ | $C_L$ = 15 pF<br>See Figure 4.2 Propagation Delay Timing on page 14 | — | 2.5 | 4.0 | ns |
| Output Fall Time | $t_f$ | $C_L$ = 15 pF<br>See Figure 4.2 Propagation Delay Timing on page 14 | — | 2.5 | 4.0 | ns |

| Parameter | Symbol | Test Condition | Min | Typ | Max | Unit |
|---|---|---|---|---|---|---|
| Peak Eye Diagram Jitter | $t_{JIT(PK)}$ | See Figure 2.2 Modulation Scheme on page 5 | — | 350 | — | ps |
| Common Mode Transient Immunity | CMTI | $V_I = V_{DD}$ or 0 V<br>$V_{CM}$ = 1500 V (see Figure 4.3 Common-Mode Transient Immunity Test Circuit on page 15) | 35 | 50 | — | kV/µs |
| Enable to Data Valid | $t_{en1}$ | See Figure 4.1 ENABLE Timing Diagram on page 14 | — | 6.0 | 11 | ns |
| Enable to Data Tri-State | $t_{en2}$ | See Figure 4.1 ENABLE Timing Diagram on page 14 | — | 8.0 | 12 | ns |
| Startup Time[3] | $t_{SU}$ | | — | 15 | 40 | µs |

**Notes:**

1. The nominal output impedance of an isolator driver channel is approximately 50 Ω, ±40%, which is a combination of the value of the on-chip series termination resistor and channel resistance of the output driver FET. When driving loads where transmission line effects will be a factor, output pins should be appropriately terminated with controlled impedance PCB traces.
2. $t_{PSK(P-P)}$ is the magnitude of the difference in propagation delay times measured between different units operating at the same supply voltages, load, and ambient temperature.
3. Start-up time is the time period from the application of power to valid data at the output.

**Table 4.5. Regulatory Information[1]**

| |
|---|
| **CSA** |
| The Si86xx is certified under CSA Component Acceptance Notice 5A, IEC61010-1 and IEC60950-1. For more details, see File 232873. |
| **VDE** |
| The Si86xx is certified according to IEC 60747-5-2. For more details, see File 5006301-4880-0001. |
| **UL** |
| The Si86xx is certified under UL1577 component recognition program. For more details, see File E257455. |
| **CQC** |
| The Si86xx is certified under GB4943.1-2011. For more details, see certificates CQC13001096110 and CQC13001096239. |

**Note:**

1. Regulatory Certifications apply to 2.5 $kV_{RMS}$ rated devices which are production tested to 3.0 $kV_{RMS}$ for 1 sec. For more information, see 5.5 Pin Descriptions (Si866x).

**Table 4.6. Insulation and Safety-Related Specifications**

| Parameter | Symbol | Test Condition | Value | | | Unit |
|---|---|---|---|---|---|---|
| | | | WB SOIC-16 | NB SOIC-16 | NB SOIC-8 | |
| Nominal Air Gap (Clearance)[1] | L(IO1) | | 8.0 | 4.9 | 4.9 | mm |
| Nominal External Tracking (Creepage)[1] | L(IO2) | | 8.0 | 4.01 | 4.01 | mm |
| Minimum Internal Gap (Internal Clearance) | | | 0.014 | 0.014 | 0.014 | mm |

| Parameter | Symbol | Test Condition | Value | | | Unit |
|---|---|---|---|---|---|---|
| | | | WB SO-IC-16 | NB SO-IC-16 | NB SOIC-8 | |
| Tracking Resistance (Proof Tracking Index) | PTI | IEC60112 | 600 | 600 | 600 | $V_{RMS}$ |
| Erosion Depth | ED | | 0.019 | 0.019 | 0.040 | mm |
| Resistance (Input-Output)[2] | $R_{IO}$ | | $10^{12}$ | $10^{12}$ | $10^{12}$ | Ω |
| Capacitance (Input-Output)[2] | $X_{IO}$ | f = 1 MHz | 2.0 | 2.0 | 2.0 | pF |
| Input Capacitance[3] | $C_I$ | | 4.0 | 4.0 | 4.0 | pF |

**Notes:**

1. The values in this table correspond to the nominal creepage and clearance values. VDE certifies the clearance and creepage limits as 4.7 mm minimum for the NB SOIC-16 and SOIC-8 packages and 8.5 mm minimum for the WB SOIC-16 package. UL does not impose a clearance and creepage minimum for component-level certifications. CSA certifies the clearance and creepage limits as 3.9 mm minimum for the NB SOIC-16 and SOIC-8 and 7.6 mm minimum for the WB SOIC-16 package.
2. To determine resistance and capacitance, the Si86xx is converted into a 2-terminal device. Pins 1–8 (Pins 1-4 for the NB SOIC-8) are shorted together to form the first terminal and pins 9–16 (Pins 5-8 for the NB SOIC-8) are shorted together to form the second terminal. The parameters are then measured between these two terminals.
3. Measured from input pin to ground.

**Table 4.7. IEC 60664-1 (VDE 0844 Part 2) Ratings**

| Parameter | Test Conditions | Specification | |
|---|---|---|---|
| | | NB SOIC-16<br>NB SOIC-8 | WB SOIC-16 |
| Basic Isolation Group | Material Group | I | I |
| Installation Classification | Rated Mains Voltages < 150 $V_{RMS}$ | I-IV | I-IV |
| | Rated Mains Voltages < 300 $V_{RMS}$ | I-III | I-IV |
| | Rated Mains Voltages < 400 $V_{RMS}$ | I-II | I-III |
| | Rated Mains Voltages < 600 $V_{RMS}$ | I-II | I-III |

**Table 4.8. IEC 60747-5-2 Insulation Characteristics for Si86xxxx***

| Parameter | Symbol | Test Condition | Characteristic | | Unit |
|---|---|---|---|---|---|
| | | | WB SOIC-16 | NB SOIC-16<br>SOIC-8 | |
| Maximum Working Insulation Voltage | $V_{IORM}$ | | 1200 | 630 | Vpeak |
| Input to Output Test Voltage | $V_{PR}$ | Method b1 ($V_{IORM}$ x 1.875 = $V_{PR}$, 100% Production Test, $t_m$ = 1 sec, Partial Discharge < 5 pC) | 2250 | 1182 | |
| Transient Overvoltage | $V_{IOTM}$ | t = 60 sec | 6000 | 6000 | Vpeak |
| Pollution Degree (DIN VDE 0110, Table 1) | | | 2 | 2 | |

| Parameter | Symbol | Test Condition | Characteristic | | Unit |
|---|---|---|---|---|---|
| | | | WB SOIC-16 | NB SOIC-16<br>SOIC-8 | |
| Insulation Resistance at $T_S$, $V_{IO}$ = 500 V | $R_S$ | | $>10^9$ | $>10^9$ | Ω |
| **Note:** Maintenance of the safety data is ensured by protective circuits. The Si86xxxx provides a climate classification of 40/125/21. | | | | | |

**Table 4.9. IEC Safety Limiting Values[1]**

| Parameter | Symbol | Test Condition | Max | | | Unit |
|---|---|---|---|---|---|---|
| | | | WB SOIC-16 | NB SOIC-16 | NB SOIC-8 | |
| Case Temperature | $T_S$ | | 150 | 150 | 150 | °X |
| Safety Input, Output, or Supply Current | $I_S$ | $\theta_{JA}$ = 100 °C/W (WB SOIC-16), 105 °C/W (NB SOIC-16), 140 °C/W (NB SOIC-8),<br>$V_I$ = 5.5 V, $T_J$ = 150 °C, $T_A$ = 25 °C | 220 | 215 | 160 | mA |
| Device Power Dissipation[2] | $P_D$ | | 415 | 415 | 150 | mW |

**Notes:**

1. Maximum value allowed in the event of a failure; also see the thermal derating curve in Figure 4.4 Figure 5.4 on page 28, Figure 4.5 Figure 5.5 on page 28 and Figure 4.6 Figure 5.6 on page 29.
2. The Si86xx is tested with VDD1 = VDD2 = 5.5 V, $T_J$ = 150 ºC, $C_L$ = 15 pF, input a 150 Mbps 50% duty cycle square wave.

**Table 4.10. Thermal Characteristics**

| Parameter | Symbol | WB SOIC-16 | NB SOIC-16 | NB SOIC-8 | Unit |
|---|---|---|---|---|---|
| IC Junction-to-Air Thermal Resistance | $\theta_{JA}$ | 100 | 105 | 140 | ºC/W |

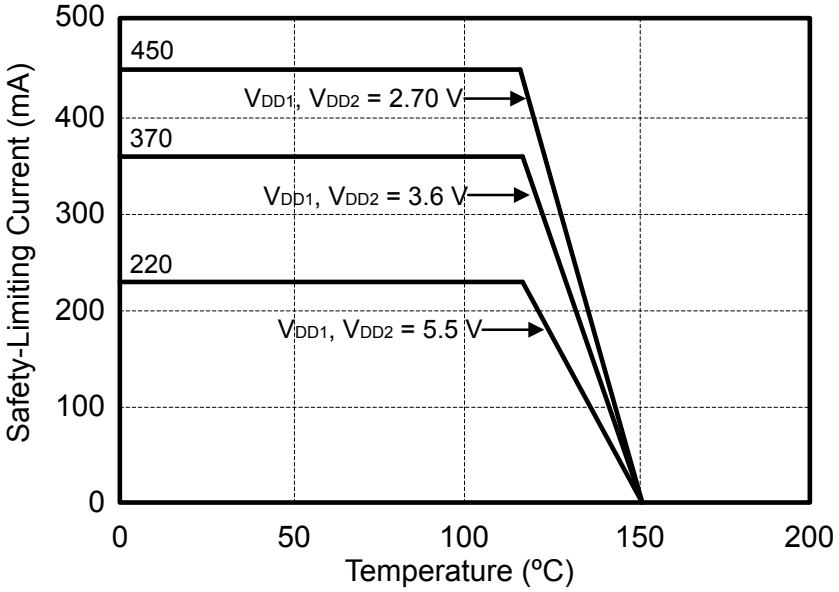


**Figure 4.4. (WB SOIC-16) Thermal Derating Curve, Dependence of Safety Limiting Values with Case Temperature per DIN EN 60747-5-2**

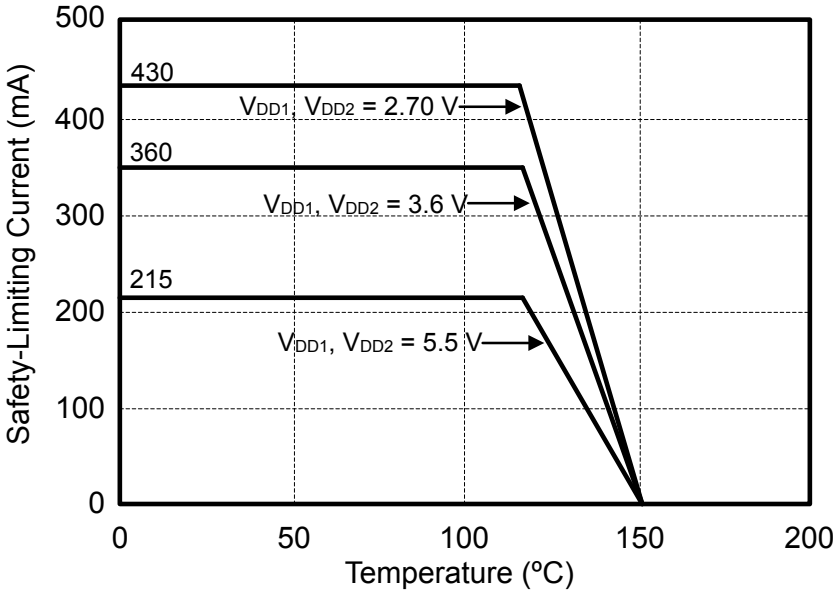


**Figure 4.5. (NB SOIC-16) Thermal Derating Curve, Dependence of Safety Limiting Values with Case Temperature per DIN EN 60747-5-2**

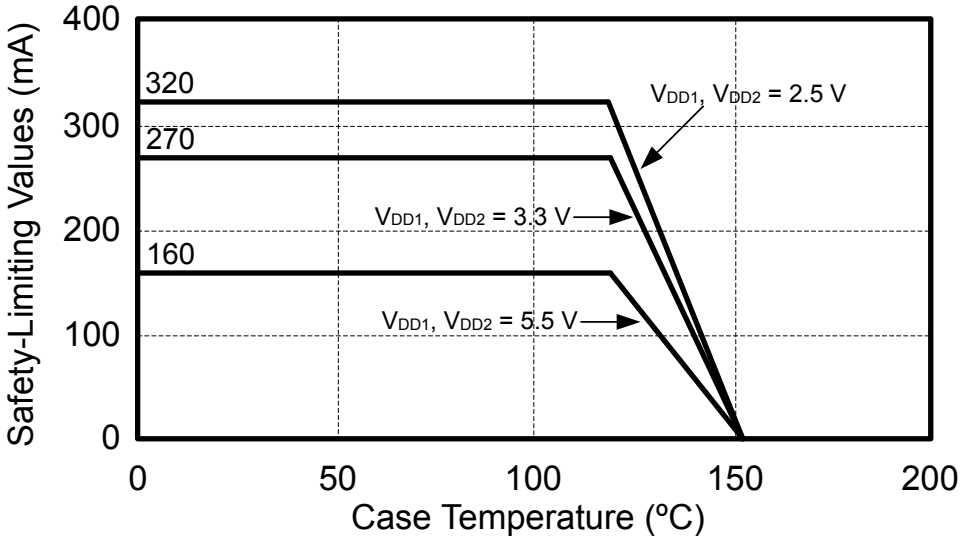


**Figure 4.6. (NB SOIC-8) Thermal Derating Curve, Dependence of Safety Limiting Values with Case Temperature per DIN EN 60747-5-2**

**Table 4.11. Absolute Maximum Ratings[1]**

| Parameter | Symbol | Min | Max | Unit |
|---|---|---|---|---|
| Storage Temperature[2] | $T_{STG}$ | –65 | 150 | ºC |
| Ambient Temperature Under Bias | $T_A$ | –40 | 125 | ºC |
| Junction Temperature | $T_J$ | — | 150 | °C |
| Supply Voltage | $V_{DD1}$, $V_{DD2}$ | –0.5 | 7.0 | V |
| Input Voltage | $V_I$ | –0.5 | $V_{DD}$ + 0.5 | V |
| Output Voltage | $V_O$ | –0.5 | $V_{DD}$ + 0.5 | V |
| Output Current Drive Channel (All devices unless otherwise stated) | $I_O$ | — | 10 | mA |
| Output Current Drive Channel (All Si86xxxA-x-xx devices) | $I_O$ | — | 22 | mA |
| Latchup Immunity[3] | | — | 100 | V/ns |
| Lead Solder Temperature (10 s) | | — | 260 | ºC |
| Maximum Isolation (Input to Output) (1 sec) NB SOIC-16, SOIC-8 | | — | 4500 | $V_{RMS}$ |
| Maximum Isolation (Input to Output) (1 sec) WB SOIC-16 | | — | 6500 | $V_{RMS}$ |

**Notes:**

1. Permanent device damage may occur if the absolute maximum ratings are exceeded. Functional operation should be restricted to conditions as specified in the operational sections of this data sheet.
2. VDE certifies storage temperature from –40 to 150 °C.
3. Latchup immunity specification is for slew rate applied across GND1 and GND2.

# 5. Pin Descriptions

## 5.1 Pin Descriptions (Si861x/2x Narrow Body SOIC-8)

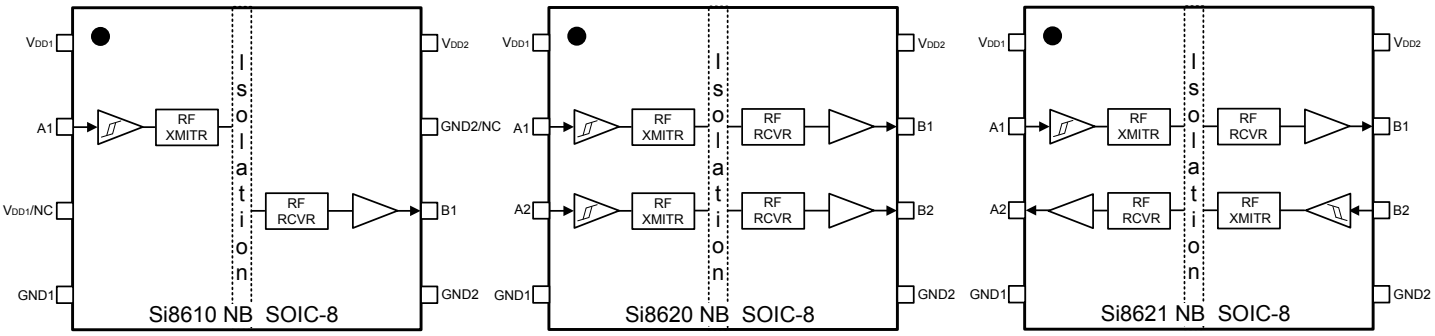


**Figure 5.1. Si861x/2x Narrow Body SOIC-8 Pin Descriptions**

**Table 5.1. Si861x/2x Narrow Body SOIC-8 Pin Descriptions**

| Name | SOIC-8 Pin# Si861x | SOIC-8 Pin# Si862x | Type | Description |
|---|---|---|---|---|
| $V_{DD1}$/NC* | 1,3 | 1 | Supply | Side 1 power supply. |
| GND1 | 4 | 4 | Ground | Side 1 ground. |
| A1 | 2 | 2 | Digital I/O | Side 1 digital input or output. |
| A2 | NA | 3 | Digital I/O | Side 1 digital input or output. |
| B1 | 6 | 7 | Digital I/O | Side 2 digital input or output. |
| B2 | NA | 6 | Digital I/O | Side 2 digital input or output. |
| $V_{DD2}$ | 8 | 8 | Supply | Side 2 power supply. |
| GND2/NC* | 5, 7 | 5 | Ground | Side 2 ground. |
| **Note:** No connect. These pins are not internally connected. They can be left floating, tied to VDD, or tied to GND. | | | | |

## 5.2 Pin Descriptions (Si863x)

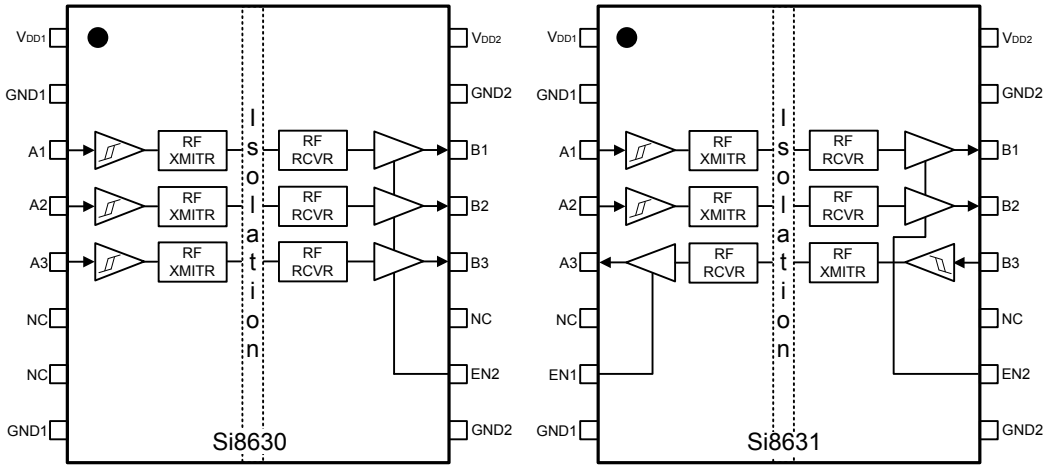


**Figure 5.2. Si863x Pin Descriptions**

**Table 5.2. Si863x Pin Descriptions**

| Name | SOIC-16 Pin# | Type | Description |
|---|---|---|---|
| $V_{DD1}$ | 1 | Supply | Side 1 power supply. |
| GND1 | 21 | Ground | Side 1 ground. |
| A1 | 3 | Digital Input | Side 1 digital input. |
| A2 | 4 | Digital Input | Side 1 digital input. |
| A3 | 5 | Digital I/O | Side 1 digital input or output. |
| NC | 6 | NA | No Connect. |
| EN1/NC2 | 7 | Digital Input | Side 1 active high enable. NC on Si8630 |
| GND1 | 81 | Ground | Side 1 ground. |
| GND2 | 91 | Ground | Side 2 ground. |
| EN2 | 10 | Digital Input | Side 2 active high enable. |
| NC | 11 | NA | No Connect. |
| B3 | 12 | Digital I/O | Side 2 digital input or output. |
| B2 | 13 | Digital Output | Side 2 digital output. |
| B1 | 14 | Digital Output | Side 2 digital output. |
| GND2 | 151 | Ground | Side 2 ground. |
| $V_{DD2}$ | 16 | Supply | Side 2 power supply. |

**Notes:**

1. For narrow-body devices, Pin 2 and Pin 8 GND must be externally connected to respective ground. Pin 9 and Pin 15 must also be connected to external ground.
2. No Connect. These pins are not internally connected. They can be left floating, tied to $V_{DD}$ or tied to GND.

## 5.3 Pin Descriptions (Si864x)

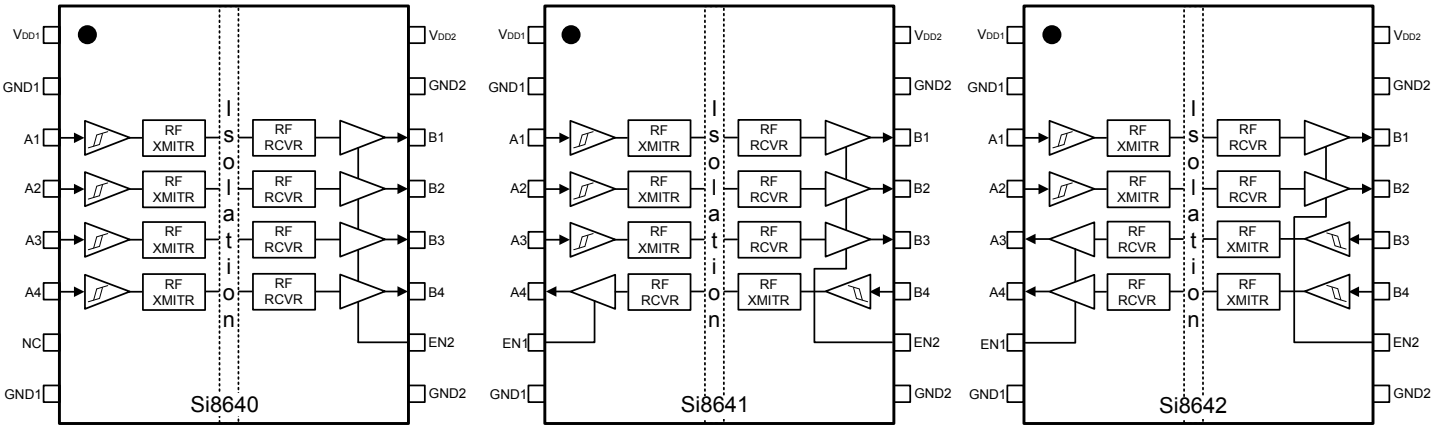


**Figure 5.3. Si864x Pin Descriptions**

**Table 5.3. Si864x Pin Descriptions**

| Name | SOIC-16 Pin# | Type | Description |
|---|---|---|---|
| $V_{DD1}$ | 1 | Supply | Side 1 power supply. |
| GND1 | 21 | Ground | Side 1 ground. |
| A1 | 3 | Digital Input | Side 1 digital input. |
| A2 | 4 | Digital Input | Side 1 digital input. |
| A3 | 5 | Digital I/O | Side 1 digital input or output. |
| A4 | 6 | Digital I/O | Side 1 digital input or output. |
| EN1/NC2 | 7 | Digital Input | Side 1 active high enable. NC on Si8640. |
| GND1 | 81 | Ground | Side 1 ground. |
| GND2 | 91 | Ground | Side 2 ground. |
| EN2 | 10 | Digital Input | Side 2 active high enable. |
| B4 | 11 | Digital I/O | Side 2 digital input or output. |
| B3 | 12 | Digital I/O | Side 2 digital input or output. |
| B2 | 13 | Digital Output | Side 2 digital output. |
| B1 | 14 | Digital Output | Side 2 digital output. |
| GND2 | 151 | Ground | Side 2 ground. |
| $V_{DD2}$ | 16 | Supply | Side 2 power supply. |

**Notes:**

1. For narrow-body devices, Pin 2 and Pin 8 GND must be externally connected to respective ground. Pin 9 and Pin 15 must also be connected to external ground.
2. No Connect. These pins are not internally connected. They can be left floating, tied to $V_{DD}$ or tied to GND.

## 5.4 Pin Descriptions (Si8650/51/52)

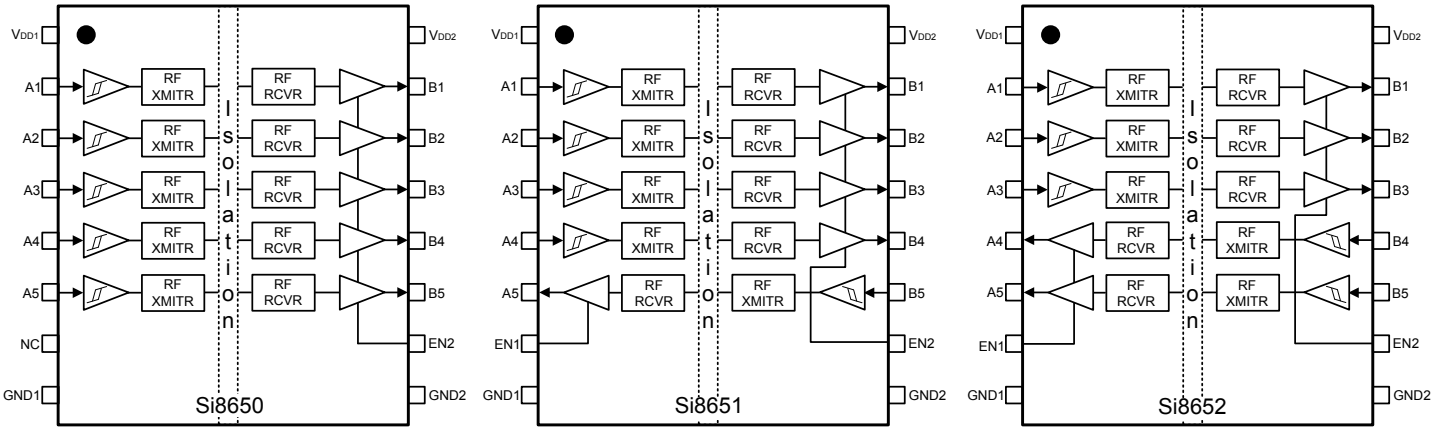


**Figure 5.4. Si865x Pin Descriptions**

**Table 5.4. Si865x Pin Descriptions**

| Name | SOIC-16 Pin# | Type | Description |
|---|---|---|---|
| $V_{DD1}$ | 1 | Supply | Side 1 power supply. |
| A1 | 2 | Digital Input | Side 1 digital input. |
| A2 | 3 | Digital Input | Side 1 digital input. |
| A3 | 4 | Digital Input | Side 1 digital input. |
| A4 | 5 | Digital I/O | Side 1 digital input or output. |
| A5 | 6 | Digital I/O | Side 1 digital input or output. |
| EN1/NC* | 7 | Digital Input | Side 1 active high enable. NC on Si8650. |
| GND1 | 8 | Ground | Side 1 ground. |
| GND2 | 9 | Ground | Side 2 ground. |
| EN2 | 10 | Digital Input | Side 2 active high enable. |
| B5 | 11 | Digital I/O | Side 2 digital input or output. |
| B4 | 12 | Digital I/O | Side 2 digital input or output. |
| B3 | 13 | Digital Output | Side 2 digital output. |
| B2 | 14 | Digital Output | Side 2 digital output. |
| B1 | 15 | Digital Output | Side 2 digital output. |
| $V_{DD2}$ | 16 | Supply | Side 2 power supply. |
| **Note:** No Connect. These pins are not internally connected. They can be left floating, tied to $V_{DD}$ or tied to GND. | | | |

## 5.5 Pin Descriptions (Si866x)

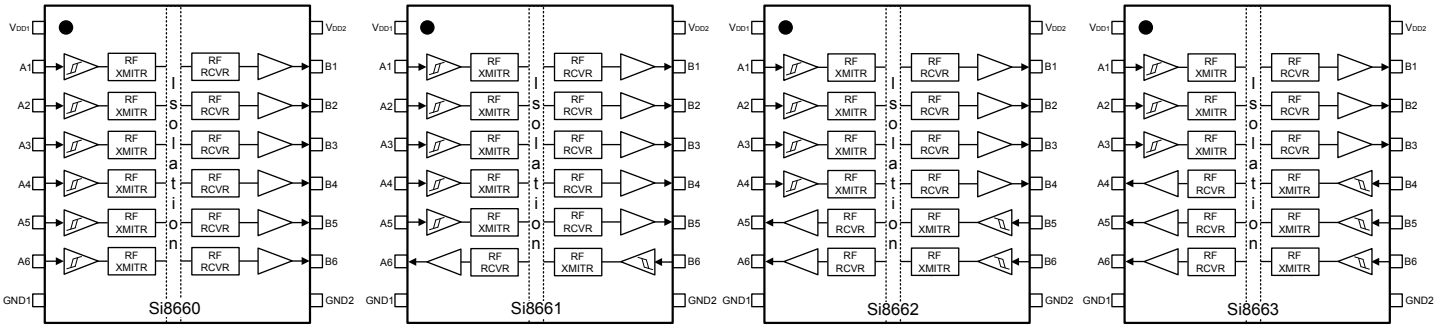


**Figure 5.5. Si866x Pin Descriptions**

**Table 5.5. Si866x Pin Descriptions**

| Name | SOIC-16 Pin# | Type | Description |
|---|---|---|---|
| $V_{DD1}$ | 1 | Supply | Side 1 power supply. |
| A1 | 2 | Digital Input | Side 1 digital input. |
| A2 | 3 | Digital Input | Side 1 digital input. |
| A3 | 4 | Digital Input | Side 1 digital input. |
| A4 | 5 | Digital I/O | Side 1 digital input or output. |
| A5 | 6 | Digital I/O | Side 1 digital input or output. |
| A6 | 7 | Digital I/O | Side 1 digital input or output. |
| GND1 | 8 | Ground | Side 1 ground. |
| GND2 | 9 | Ground | Side 2 ground. |
| B6 | 10 | Digital I/O | Side 2 digital input or output. |
| B5 | 11 | Digital I/O | Side 2 digital input or output. |
| B4 | 12 | Digital I/O | Side 2 digital input or output. |
| B3 | 13 | Digital Output | Side 2 digital output. |
| B2 | 14 | Digital Output | Side 2 digital output. |
| B1 | 15 | Digital Output | Side 2 digital output. |
| $V_{DD2}$ | 16 | Supply | Side 2 power supply. |

# 6. Package Outlines

## 6.1 Package Outline (16-Pin Wide Body SOIC)

The figure below illustrates the package details for the Si86xx Digital Isolator. The table below lists the values for the dimensions shown in the illustration.

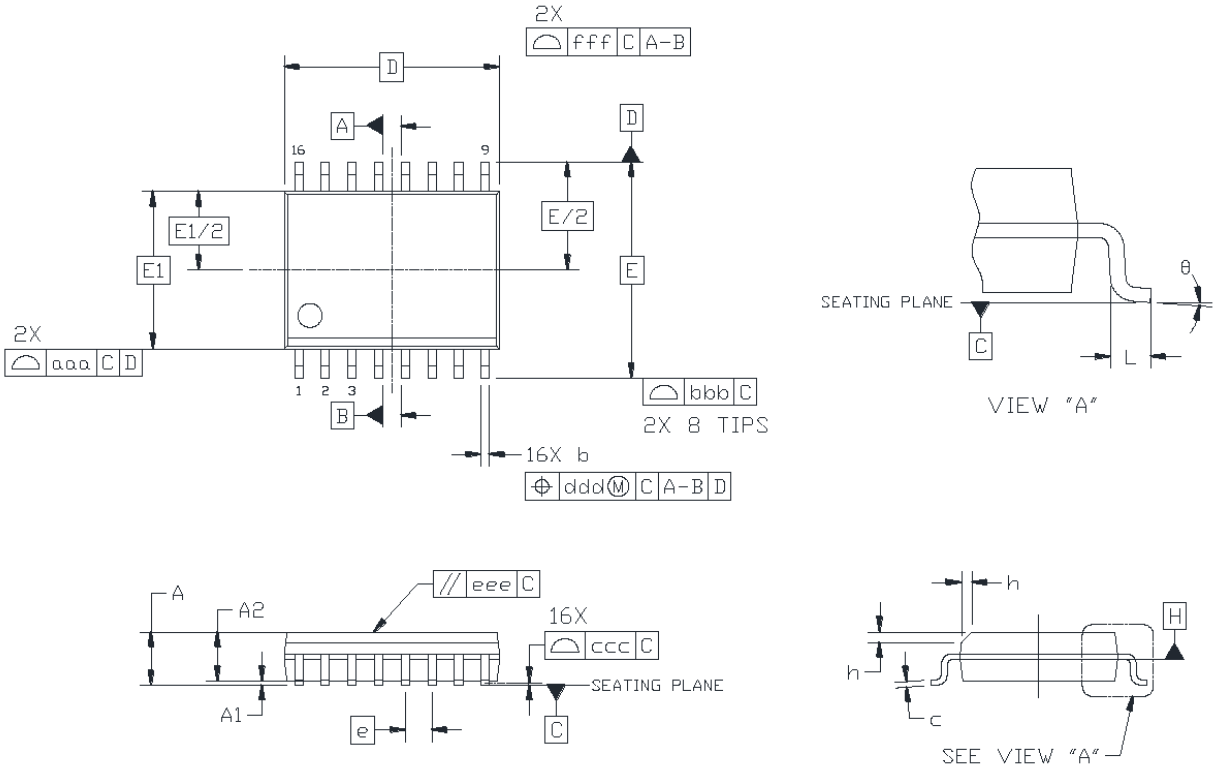


**Figure 6.1. 16-Pin Wide Body SOIC**

**Table 6.1. Package Diagram Dimensions**

| Dimension | Min | Max |
|---|---|---|
| A | — | 2.65 |
| A1 | 0.10 | 0.30 |
| A2 | 2.05 | — |
| b | 0.31 | 0.51 |
| c | 0.20 | 0.33 |
| D | 10.30 BSC | |
| E | 10.30 BSC | |
| E1 | 7.50 BSC | |
| e | 1.27 BSC | |
| L | 0.40 | 1.27 |
| h | 0.25 | 0.75 |
| θ | 0° | 8° |
| aaa | — | 0.10 |
| bbb | — | 0.33 |
| ccc | — | 0.10 |
| ddd | — | 0.25 |
| eee | — | 0.10 |
| fff | — | 0.20 |

**Notes:**

1. All dimensions shown are in millimeters (mm) unless otherwise noted.
2. Dimensioning and Tolerancing per ANSI Y14.5M-1994.
3. This drawing conforms to JEDEC Outline MS-013, Variation AA.
4. Recommended reflow profile per JEDEC J-STD-020 specification for small body, lead-free components.

## 6.2 Package Outline (16-Pin Narrow Body SOIC)

The figure below illustrates the package details for the Si86xx in a 16-pin narrow-body SOIC (SO-16). The table below lists the values for the dimensions shown in the illustration.

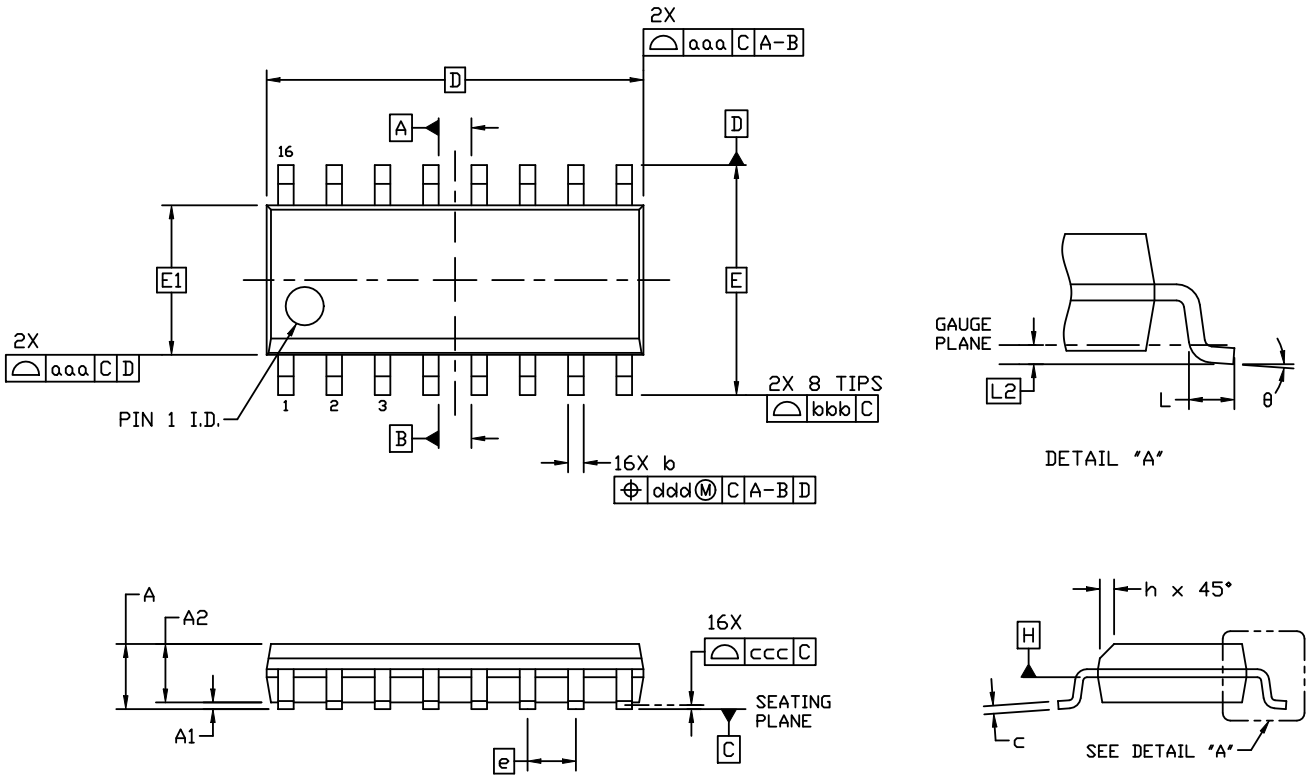


**Figure 6.2. 16-pin Small Outline Integrated Circuit (SOIC) Package**

**Table 6.2. Package Diagram Dimensions**

| Dimension | Min | Max |
|---|---|---|
| A | — | 1.75 |
| A1 | 0.10 | 0.25 |
| A2 | 1.25 | — |
| b | 0.31 | 0.51 |
| c | 0.17 | 0.25 |
| D | 9.90 BSC | |
| E | 6.00 BSC | |
| E1 | 3.90 BSC | |
| e | 1.27 BSC | |
| L | 0.40 | 1.27 |
| L2 | 0.25 BSC | |
| h | 0.25 | 0.50 |
| θ | 0° | 8° |
| aaa | 0.10 | |
| bbb | 0.20 | |
| ccc | 0.10 | |
| ddd | 0.25 | |

**Notes:**

1. All dimensions shown are in millimeters (mm) unless otherwise noted.
2. Dimensioning and Tolerancing per ANSI Y14.5M-1994.
3. This drawing conforms to the JEDEC Solid State Outline MS-012, Variation AC.
4. Recommended card reflow profile is per the JEDEC/IPC J-STD-020 specification for Small Body Components.

## 6.3 Package Outline (8-Pin Narrow Body SOIC)

The figure below illustrates the package details for the Si86xx. The table below lists the values for the dimensions shown in the illustration.

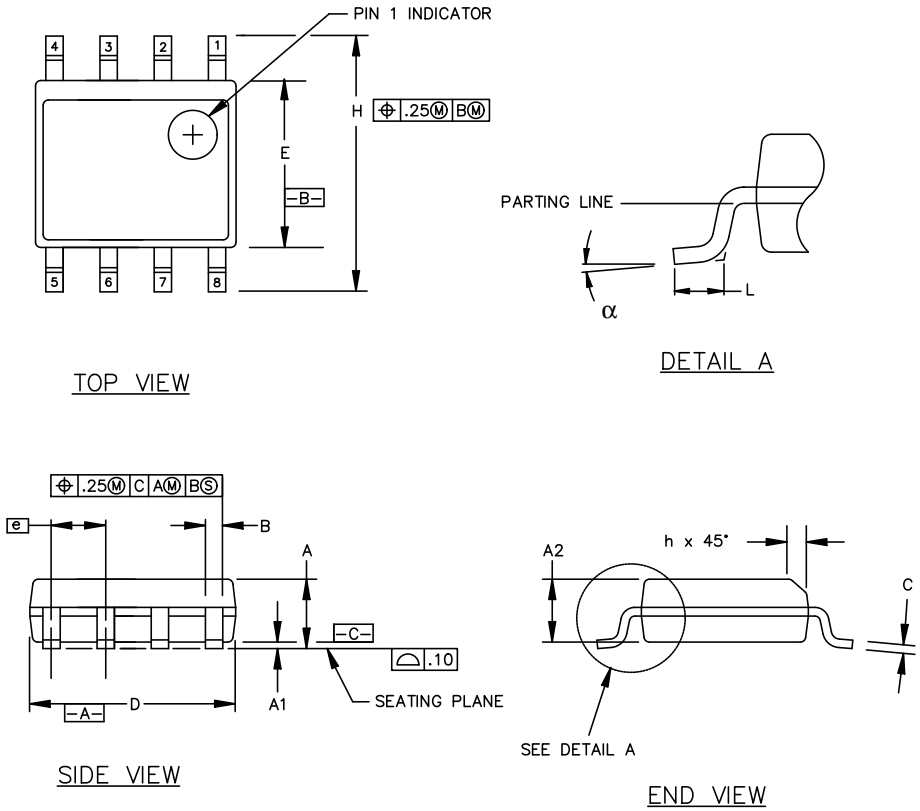


**Figure 6.3. 8-pin Small Outline Integrated Circuit (SOIC) Package**

**Table 6.3. Package Diagram Dimensions**

| Symbol | Millimeters | |
|---|---|---|
| | Min | Max |
| A | 1.35 | 1.75 |
| A1 | 0.10 | 0.25 |
| A2 | 1.40 REF | 1.55 REF |
| B | 0.33 | 0.51 |
| C | 0.19 | 0.25 |
| D | 4.80 | 5.00 |
| E | 3.80 | 4.00 |
| e | 1.27 BSC | |
| H | 5.80 | 6.20 |
| h | 0.25 | 0.50 |
| L | 0.40 | 1.27 |
| □ | 0° | 8° |

# 7. Land Patterns

## 7.1 Land Pattern (16-Pin Wide-Body SOIC)

The figure below illustrates the recommended land pattern details for the Si86xx in a 16-pin wide-body SOIC. The table below lists the values for the dimensions shown in the illustration.

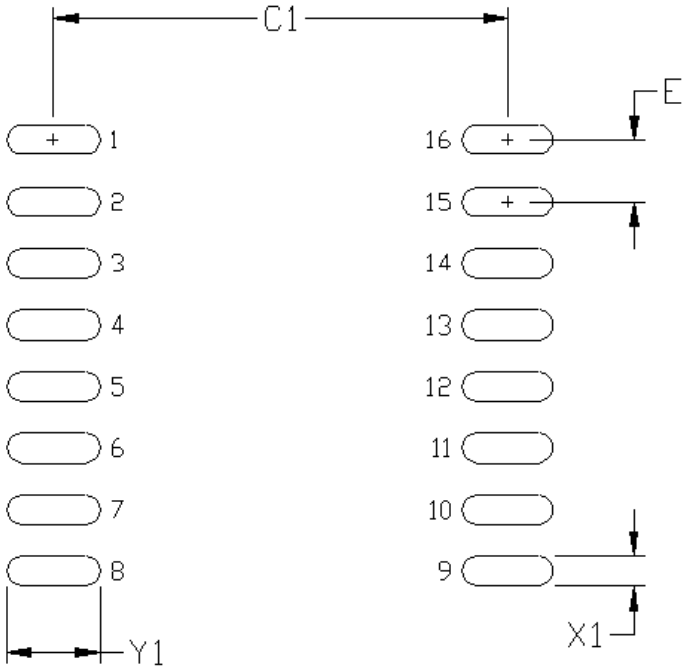


**Figure 7.1. 16-Pin SOIC Land Pattern**

**Table 7.1. 16-Pin Wide Body SOIC Land Pattern Dimensions**

| Dimension | Feature | (mm) |
|---|---|---|
| C1 | Pad Column Spacing | 9.40 |
| E | Pad Row Pitch | 1.27 |
| X1 | Pad Width | 0.60 |
| Y1 | Pad Length | 1.90 |

**Notes:**

1. This Land Pattern Design is based on IPC-7351 pattern SOIC127P1032X265-16AN for Density Level B (Median Land Protrusion).
2. All feature sizes shown are at Maximum Material Condition (MMC) and a card fabrication tolerance of 0.05 mm is assumed.

## 7.2 Land Pattern (16-Pin Narrow Body SOIC)

The figure below illustrates the recommended land pattern details for the Si86xx in a 16-pin narrow-body SOIC. The table below lists the values for the dimensions shown in the illustration.

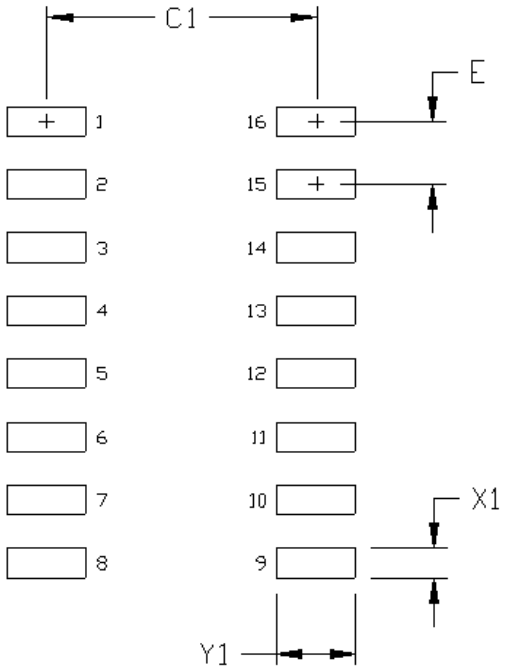


**Figure 7.2. 16-Pin Narrow Body SOIC PCB Land Pattern**

**Table 7.2. 16-Pin Narrow Body SOIC Land Pattern Dimensions**

| Dimension | Feature | (mm) |
|---|---|---|
| C1 | Pad Column Spacing | 5.40 |
| E | Pad Row Pitch | 1.27 |
| X1 | Pad Width | 0.60 |
| Y1 | Pad Length | 1.55 |

**Notes:**

1. This Land Pattern Design is based on IPC-7351 pattern SOIC127P600X165-16N for Density Level B (Median Land Protrusion).
2. All feature sizes shown are at Maximum Material Condition (MMC) and a card fabrication tolerance of 0.05 mm is assumed.

## 7.3 Land Pattern (8-Pin Narrow Body SOIC)

The figure below illustrates the recommended land pattern details for the Si86xx in an 8-pin narrow-body SOIC. The table below lists the values for the dimensions shown in the illustration.

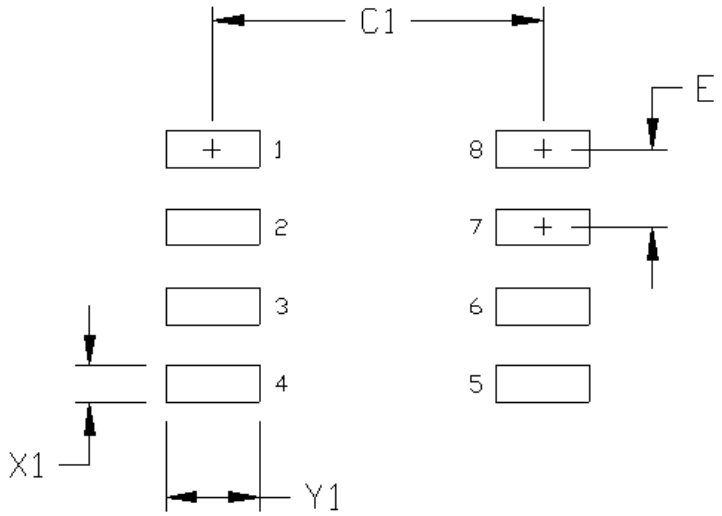


**Figure 7.3. PCB Land Pattern: 8-Pin Narrow Body SOIC**

**Table 7.3. PCM Land Pattern Dimensions (8-Pin Narrow Body SOIC)**

| Dimension | Feature | (mm) |
|---|---|---|
| C1 | Pad Column Spacing | 5.40 |
| E | Pad Row Pitch | 1.27 |
| X1 | Pad Width | 0.60 |
| Y1 | Pad Length | 1.55 |

**Notes:**

1. This Land Pattern Design is based on IPC-7351 pattern SOIC127P600X173-8N for Density Level B (Median Land Protrusion).
2. All feature sizes shown are at Maximum Material Condition (MMC) and a card fabrication tolerance of 0.05 mm is assumed.

# 8. Top Markings

## 8.1 Top Marking (16-Pin Wide Body SOIC)

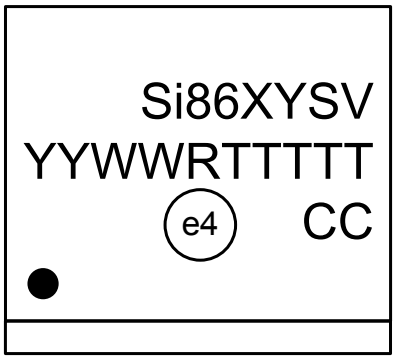


**Figure 8.1. 16-Pin Wide Body SOIC**

**Table 8.1. Top Marking Explanation (16-Pin Wide Body SOIC)**

| | | |
|---|---|---|
| **Line 1 Marking:** | Base Part Number<br>Ordering Options<br>(See 1. Ordering Guide for more information). | Si86 = Isolator product series<br>XY = Channel Configuration |
| | | X = # of data channels (5, 4, 3, 2, 1)<br>Y = # of reverse channels (2, 1, 0) |
| | | S = Speed Grade (max data rate) and operating mode: |
| | | A = 1 Mbps (default output = low)<br>B = 150 Mbps (default output = low)<br>D = 1 Mbps (default output = high)<br>E = 150 Mbps (default output = high) |
| | | V = Insulation rating |
| | | A = 1 kV; B = 2.5 kV; C = 3.75 kV; D = 5.0 kV |
| **Line 2 Marking:** | YY = Year<br>WW = Workweek | Assigned by assembly subcontractor. Corresponds to the year and work week of the mold date. |
| | RTTTTT = Mfg Code | Manufacturing code from assembly house<br>“R” indicates revision |
| **Line 3 Marking:** | Circle = 1.7 mm Diameter<br>(Center-Justified) | “e4” Pb-free symbol |
| | Country of Origin ISO Code Abbreviation | CC = Country of Origin ISO Code Abbreviation<br>• TW = Taiwan<br>• TH = Thailand |

## 8.2 Top Marking (16-Pin Narrow Body SOIC)

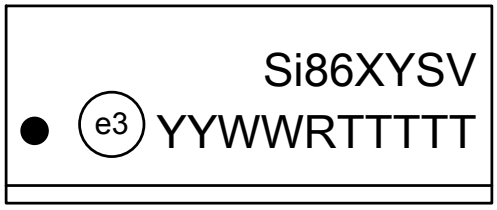


**Figure 8.2. 16-Pin Narrow Body SOIC**

**Table 8.2. Top Marking Explanation (16-Pin Narrow Body SOIC)**

| | | |
|---|---|---|
| **Line 1 Marking:** | Base Part Number<br>Ordering Options<br>(See 1. Ordering Guide for more information.) | Si86 = Isolator product series<br>XY = Channel Configuration |
| | | X = # of data channels (5, 4, 3, 2, 1)<br>Y = # of reverse channels (2, 1, 0) |
| | | S = Speed Grade (max data rate) and operating mode: |
| | | A = 1 Mbps (default output = low)<br>B = 150 Mbps (default output = low)<br>D = 1 Mbps (default output = high)<br>E = 150 Mbps (default output = high) |
| | | V = Insulation rating |
| | | A = 1 kV; B = 2.5 kV; C = 3.75 kV |
| **Line 2 Marking:** | Circle = 1.2 mm Diameter | “e3” Pb-Free Symbol |
| | YY = Year<br>WW = Work Week | Assigned by the assembly subcontractor. Corresponds to the year and work week of the mold date. |
| | RTTTTT = Mfg Code | Manufacturing code from assembly house<br>“R” indicates revision |

## 8.3 Top Marking (8-Pin Narrow Body SOIC)

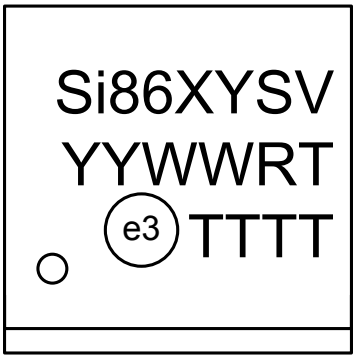


**Figure 8.3. 8-Pin Narrow Body SOIC**

**Table 8.3. Top Marking Explanation (8-Pin Narrow Body SOIC)**

| | | |
|---|---|---|
| **Line 1 Marking:** | Base Part Number<br>Ordering Options<br>(See 1. Ordering Guide for more information). | Si86 = Isolator Product Series<br>XY = Channel Configuration<br>S = Speed Grade (max data rate)<br>V = Insulation rating |
| **Line 2 Marking:** | YY = Year<br>WW = Workweek | Assigned by assembly subcontractor. Corresponds to the year and workweek of the mold date. |
| | R = Product Revision<br>T = First character of the manufacturing code | |
| **Line 3 Marking:** | Circle = 1.1 mm Diameter | “e3” Pb-Free Symbol. |
| | TTTT = Last four characters of the manufacturing code | Last four characters of the manufacturing code. |

# 9. Revision History

**Revision 1.03**

September 2019

- Updated Ordering Guide.

**Revision 1.02**

February 2018

- Added SI8641AB-AS1 and SI8642AB-AS1 to Ordering Guide for Automotive-Grade OPN options

**Revision 1.01**

January 2018

- Updated data sheet format.
- Added new table to Ordering Guide for Automotive-Grade OPN options
- Updated Table 4.5 Regulatory Information[1] on page 25.
  - Added CQC certificate numbers.
- Updated 1. Ordering Guide.
  - Removed references to moisture sensitivity levels.
  - Removed note 2.