Features

- IEEE 802.3 Ethernet compatible
- Compatible with 10G BASE-T
- Discrete transformers and common mode chokes for flexible PCB layout
- Pairing common mode choke SRF2012-900YA for EMI reduction
- Expanded temperature range: -40 to +85 °C
- RoHS compliant* and halogen free**

SM453230-121N7Y - 10 GbE Chip LAN Transformer

Additional Information

Click these links for more information:

PRODUCT | TECHNICAL LIBRARY | INVENTORY | SAMPLES | CONTACT

Electrical Specifications @ 25 °C

Inductance (Pin 1-2 & 6-7 / short 3-4)
..120 μH min. @ 100 kHz, 0.1 V, 0 mA
Turns Ratio
Pin 1-2 : 6-7 / short 3-4 : 1:1 .....± 3 %
Insertion Loss (Pin 1-2)
1-500 MHz..... -2.0 dB Typ.
.....-3.0 dB max.
Capacitance (Pin 3-5 / short 3-4)
.....21 pF Typ.
Hi-Pot (Pin 1-6, short 3-4)
.....1500 Vac, 60 s
Operating Temperature.-40 °C to +85 °C
Storage Temperature....-40 °C to +85 °C

Packaging Specifications

Tape & Reel..... 2000 pcs./reel

How To Order

SM453230 - 121 - N7Y

Model
Packaging
121 = Inductance code
Termination
N7 = Termination code
Tolerance
Y = Tolerance code

Product Dimensions

Terminal Dimensions – Top View

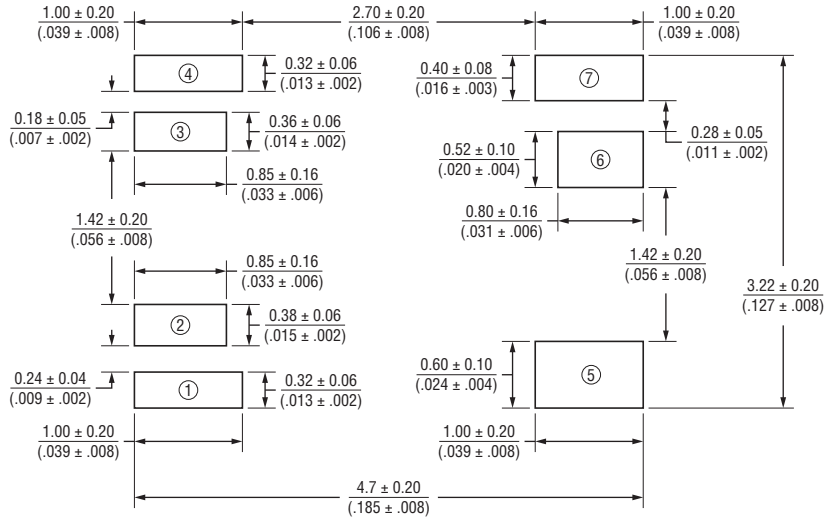

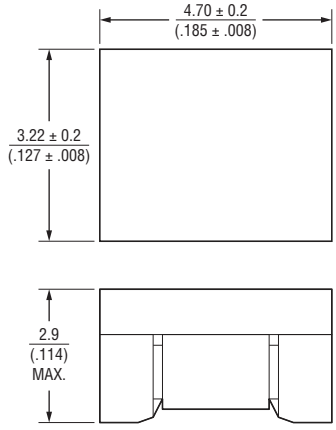

DIMENSIONS: MM (INCHES)

BOURNS®

Asia-Pacific: Tel: +886-2 2562-4117
Email: asiacus@bourns.com
EMEA: Tel: +36 88 885 877
Email: eurocus@bourns.com
The Americas: Tel: +1-951 781-5500
Email: americus@bourns.com
www.bourns.com

WARNING Cancer and Reproductive Harm www.P65Warnings.ca.gov

* RoHS Directive 2015/863, Mar 31, 2015 and Annex.
** Bourns considers a product to be "halogen free" if (a) the Bromine (Br) content is 900 ppm or less; (b) the Chlorine (Cl) content is 900 ppm or less; and (c) the total Bromine (Br) and Chlorine (Cl) content is 1500 ppm or less.

Specifications are subject to change without notice. Users should verify actual device performance in their specific applications. The products described herein and this document are subject to specific legal disclaimers as set forth on the last page of this document, and at www.bourns.com/docs/legal/disclaimer.pdf.

Recommended Layout

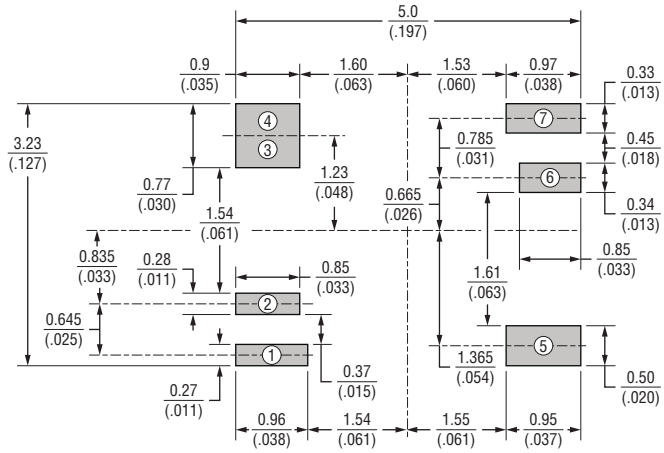

DIMENSIONS: MM (INCHES)

Electrical Schematic

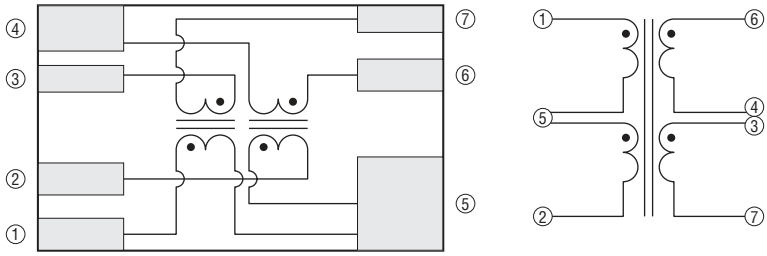

Solder Profile

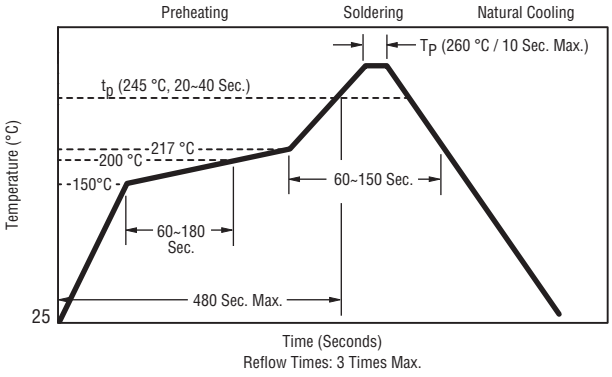

Solder Paste Stencil Aperture Recommendation

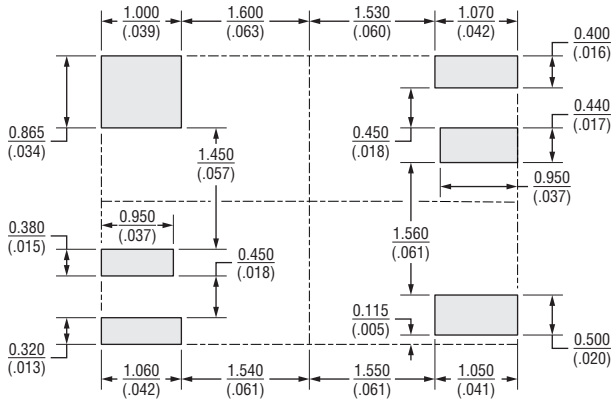

DIMENSIONS: MM (INCHES)

Specifications are subject to change without notice.
Users should verify actual device performance in their specific applications.
The products described herein and this document are subject to specific legal disclaimers as set forth on the last page of this document, and at www.bourns.com/docs/legal/disclaimer.pdf.

Packaging Specifications

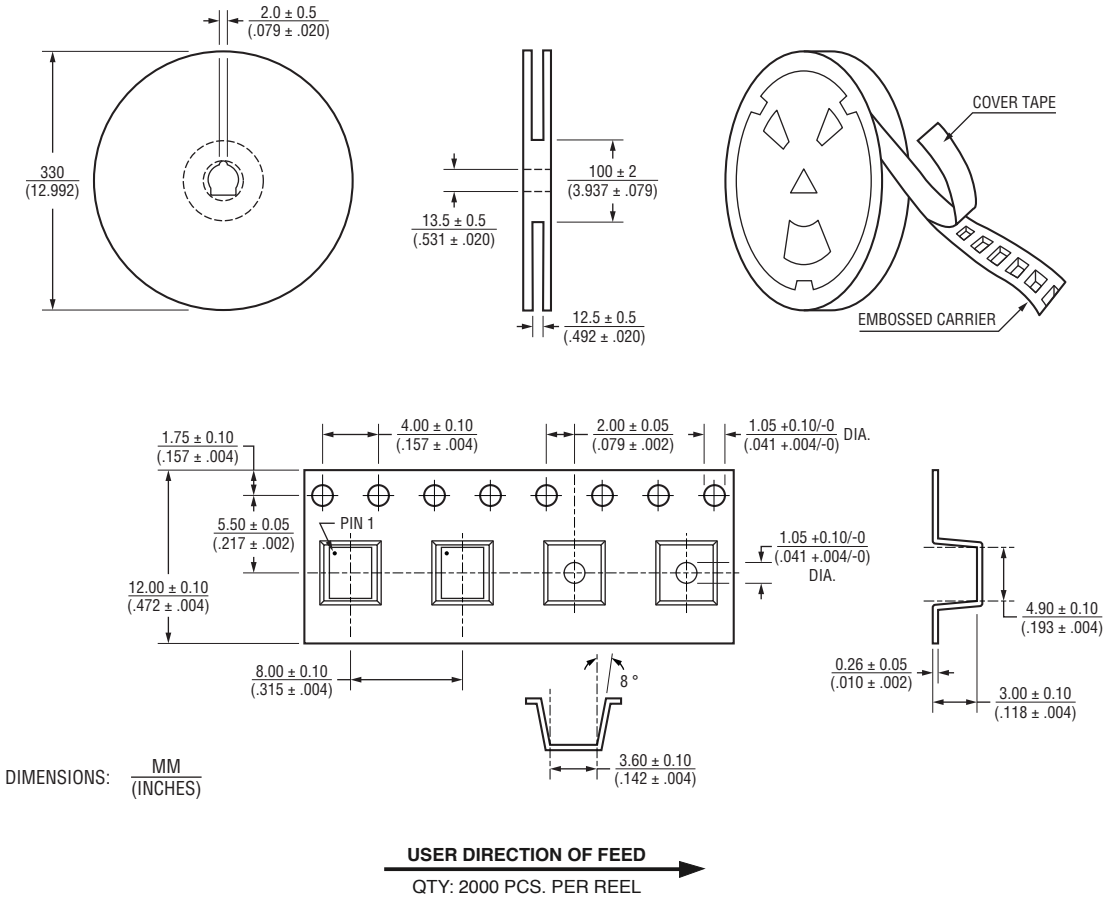

Specifications are subject to change without notice.
Users should verify actual device performance in their specific applications.
The products described herein and this document are subject to specific legal disclaimers as set forth on the last page of this document, and at www.bourns.com/docs/legal/disclaimer.pdf.