STEVAL-ISA046V2

2 A / 3.3 V high-efficiency synchronous buck converter evaluation board based on the ST1S09 with inhibit

Data Brief

Features

- Input voltage range: 2.7 V to 5.5 V
- Output voltage: 3.3 V
- Max I_{out}: 2 A
- High internal switching frequency: 1.5 MHz
- Inhibit function
- Short-circuit protection
- ST1S09I in the DFN6 3x3 package

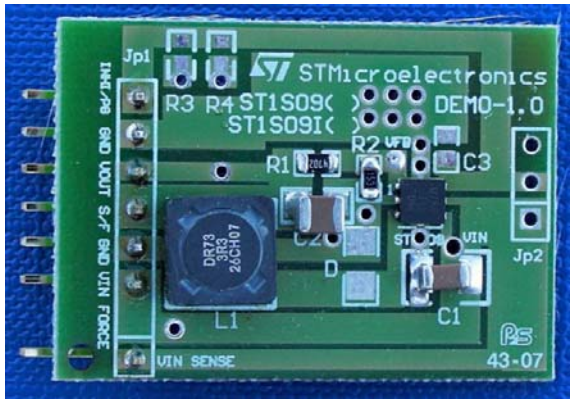

STEVAL-ISA046V2

Description

This evaluation board, based on the ST1S09I family of synchronous step-down DC-DC converters, is optimized for powering all low-voltage applications and, generally, replaces high current linear solutions when power dissipation may cause high heating of the application environment. It provides up to 2 A over an input voltage range of 2.7 V to 5.5 V.

A high 1.5 MHz switching frequency allows the use of tiny surface-mount components and in addition to the resistor divider to set the output voltage value, an inductor and two capacitors are required.

The ST1S09I features an inhibit function.

A low output ripple is guaranteed by the current mode PWM topology and by the use of low ESR surface-mount ceramic capacitors.

The device is thermally protected and current limited to prevent damage due to accidental short-circuit.

The ST1S09 family is available in the DFN6 3x3 package.

For further information contact your local STMicroelectronics sales office. www.st.com

1 Circuit schematic

Figure 1. Schematic

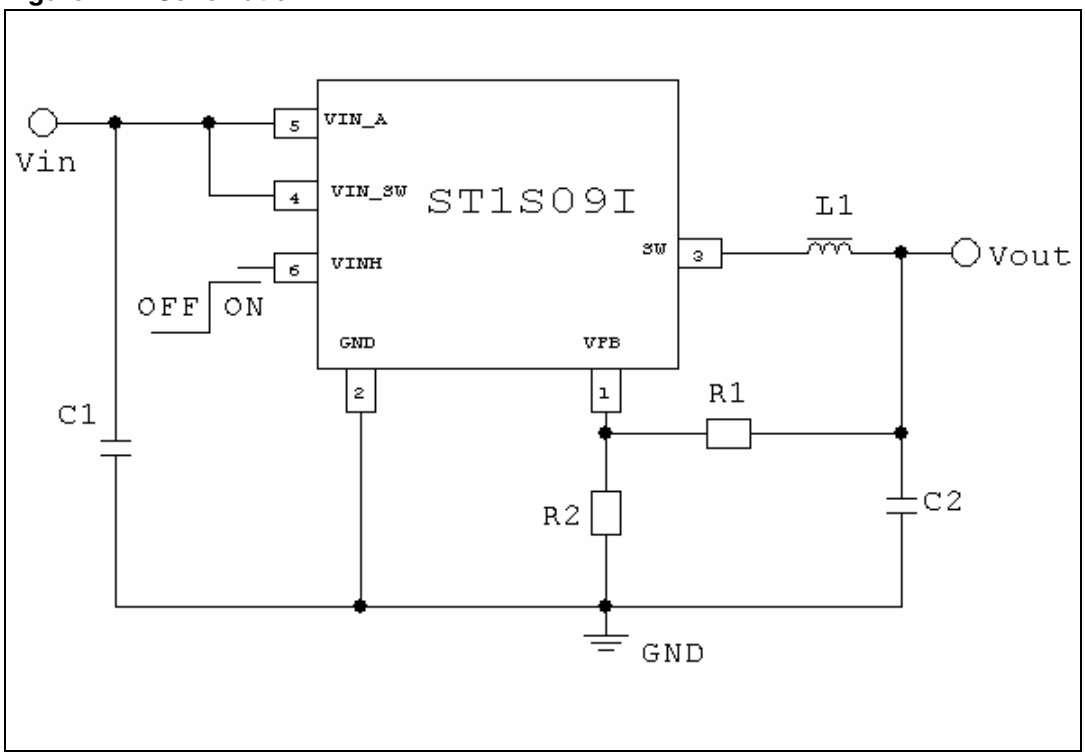

2 Revision history

Table 1. Document revision history

Date	Revision	Changes
03-Mar-2008	1	Initial release.