170° WIDE BEAM LED CHANNEL for SMALL or MEDIUM CHANNEL LETTERS and SIGN BOXES

FEATURES

12V DC
IP67
50,000 Life Hours/5 Year Warranty
115 lm/W High Efficacy
Operating Temperature -20°C to +70°C
170° Wide Beam
50 Modules Per Strand
Can be Produced in Various Colors

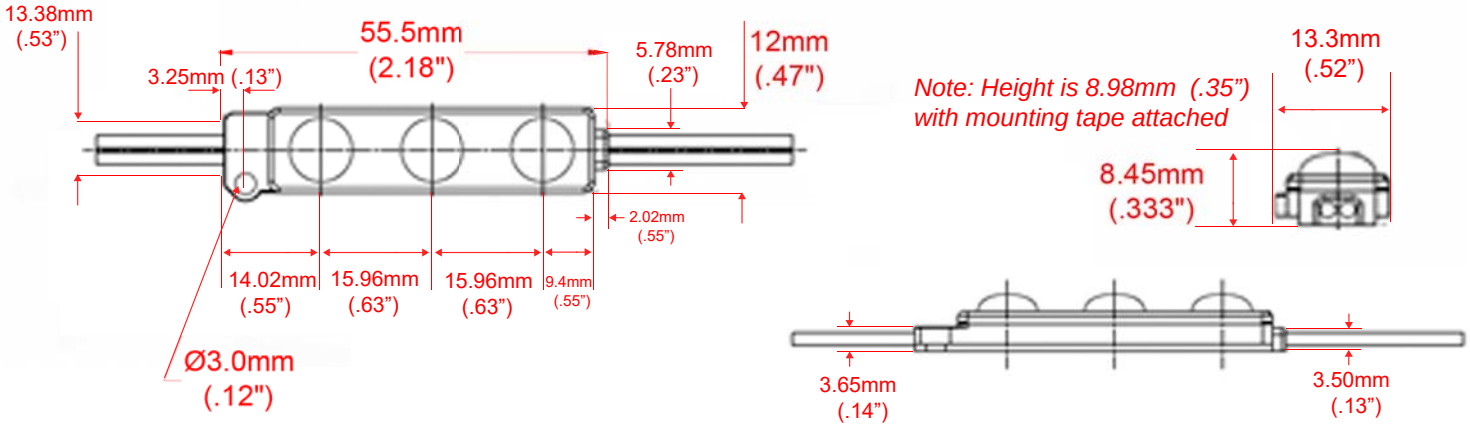

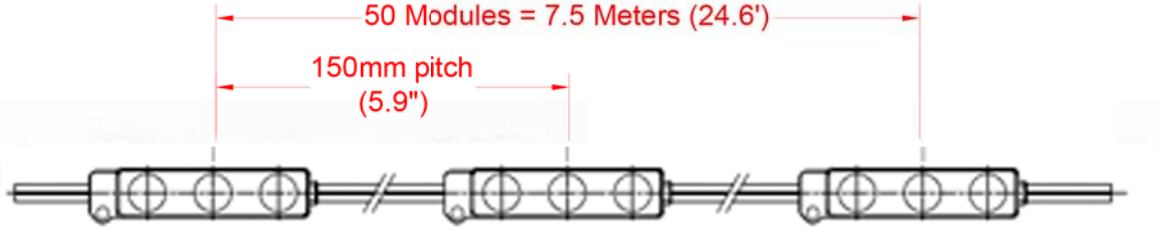

NOTES:
Mounting can be accomplished with double sided tape that is on the backside of modules. Screw holes are also present.
Wire with Red Stripe is Positive Input.
Use no more than 50 modules in series.
Take care to prevent exposed wire on the ends.

c UL us
E339601

JKL Part Number	Input Voltage	Power per Module	CCT	Beam Angle	CRI	Lumen Flux Per Module	Lumen Efficacy	No. Modules Per a Pack
ZM-333-CW	12V DC	0.66 W	6500K	170°	Ra80	76 lm	115 lm/W	50/7.5 Meters

REV. NO.	DESCRIPTION/ECO NUMBER	APPV'D DATE
A	ADDED DIMENSIONS	3/3/22
	RELEASED	9/14/19

METRIC
THIRD ANGLE PROJECTION

DIMENSIONS ARE IN mm (INCHES)
TOLERANCE UNLESS OTHERWISE SPECIFIED
1 PL +/- REF.
2 PL +/- REF.
ANGLE +/-

JKL COMPONENTS CORPORATION

TITLE: WIDE BEAM LED CHANNEL MODULE

DRAWN BY	APPV'D BY	DATE	SIZE	FSCM NO.	DRAWING NO.
L. WENGSTROM	S.C.	9/14/19	A	55335	ZM-333-CW

- CAD DRAWING -
MANUAL REVISIONS NOT PERMITTED

SCALE	RELEASED DATE	REVISION DATE	REV. NO.	SHEET
NONE	9/14/19	3/3/2022	A	1 OF 1